Dragon
Operating Instructions and Parts List

HOWARD®

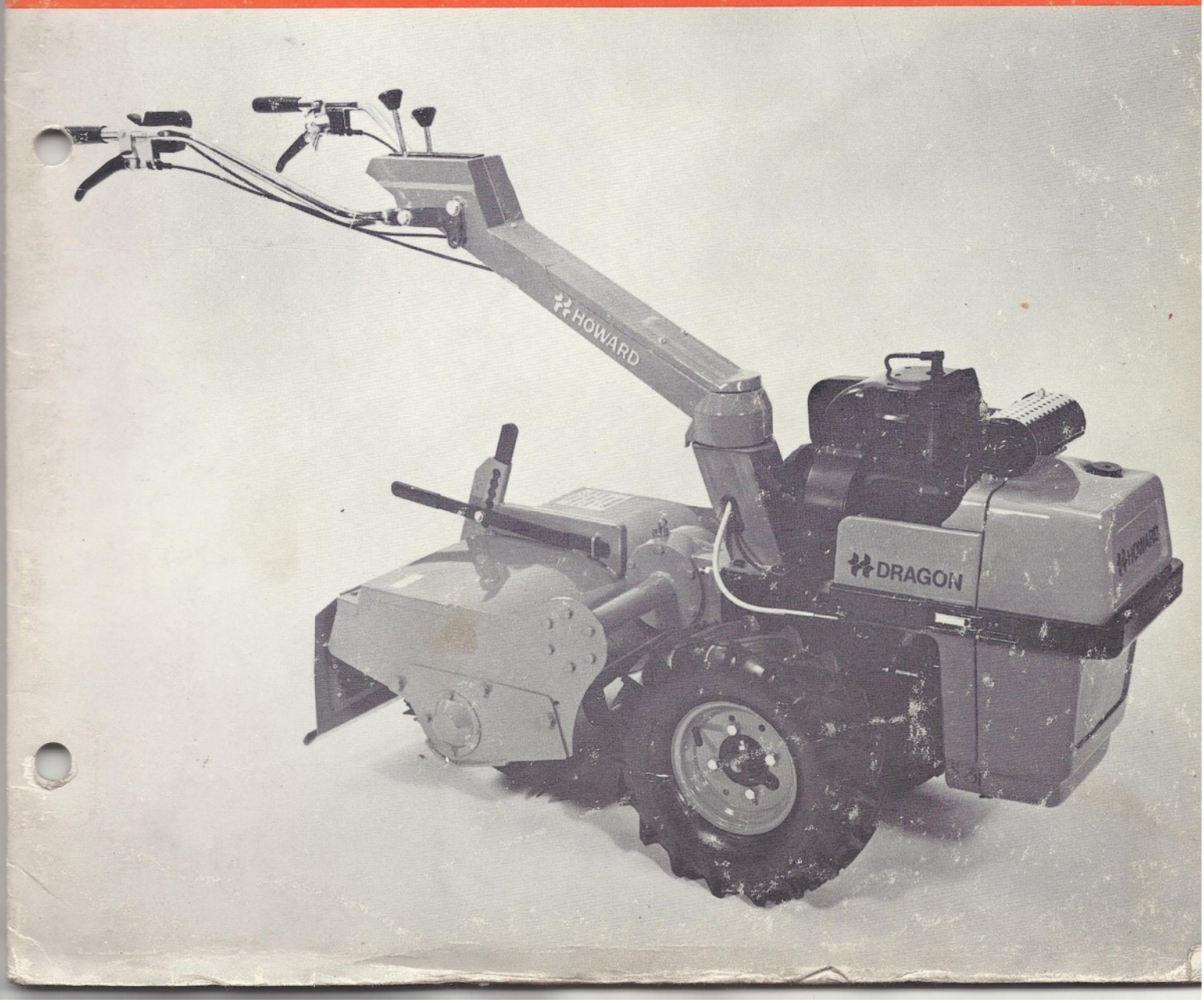

⚠ SAFETY PRECAUTIONS ⚠

Read and familiarise yourself with these Operating Instructions

Only use the machine for the purpose it was designed as described in this book

Make certain all safety guards are in place and in good order before using the machine.

Before driving off, make certain there are no obstacles in the path of the machine

Do not leave the engine running with the machine unattended

Do not allow anybody to ride on the machine

Before making any adjustments or repairs, STOP THE MACHINE, and move the throttle lever to the uppermost position to STOP THE ENGINE.

Keep all nuts, bolts, and screws tight. Lubricate the machine regularly and make any necessary adjustments to keep the machine in a safe working condition.

Fill the fuel tank with the fairing open.

The warning transfer illustrated below should always be in position on the ROTAVATOR hood. If for any reason it is missing a replacement will be supplied free of charge.

Part number 27409

WARNING

Beware of rotating blades. See there is no one in direction of driving.

Howard Dragon Operating Instructions and Parts List

HOWARD

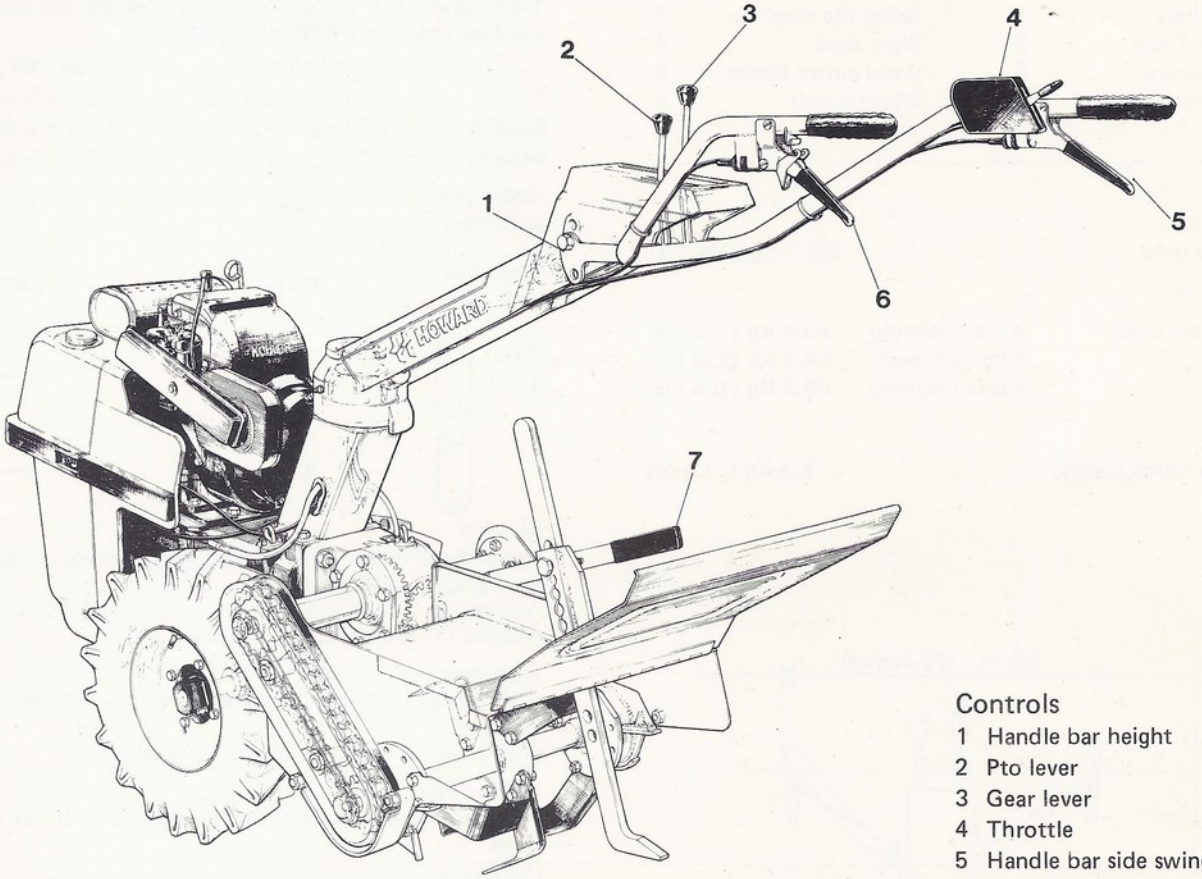

Controls
1 Handle bar height
2 Pto lever
3 Gear lever
4 Throttle
5 Handle bar side swing
6 Clutch
7 Rotor depth

The DRAGON has been designed as a mobile power unit and will have numerous purpose built attachments so that it does not lie idle in the shed throughout the year, and consequently, will appeal to Nurserymen, Growers, Market Gardeners or Contractors.

These instructions have been prepared for you to understand how it works, how to use it and how to keep it in good working order.

All directions left and right, are given when standing in-between the handlebars in the working position and facing forwards.

A long working life cannot be expected from the DRAGON if the Lubrication and Maintenance mentioned on page 9 is neglected.

Contents

Weights

Tractor unit		136.2 Kg (300 lbs)
Rotavator units	41cm (16inch)	50.4 Kg (112 lbs)
	61cm (24inch)	54.9 Kg (122 lbs)
	91cm (36inch)	69.3 Kg (154 lbs)
Front weights (each)		5.4 Kg (12 lbs)

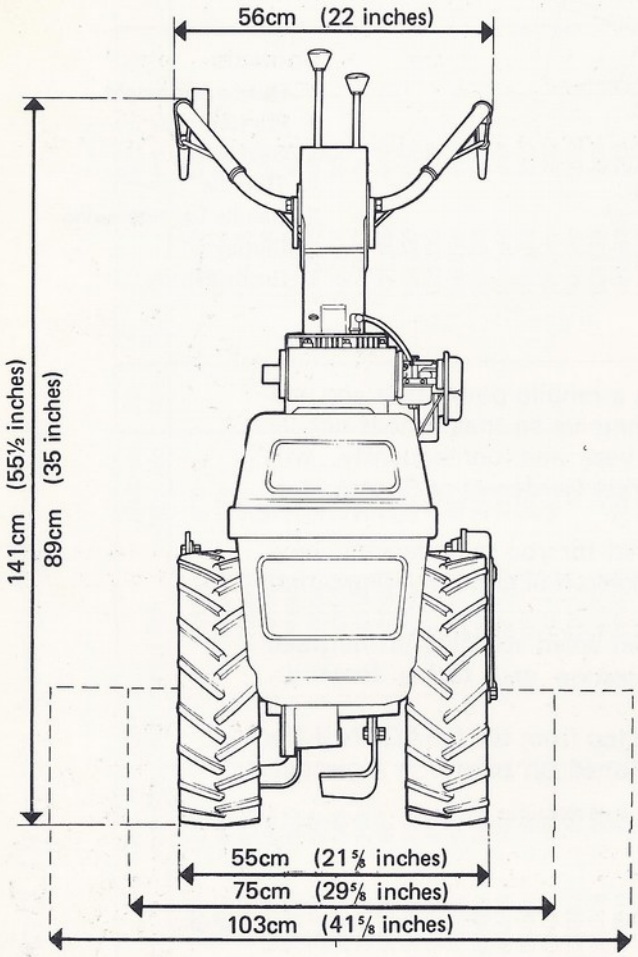

Specification

Power unit
Kohler 18IT 4 stroke air cooled petrol engine
Maximum power rating @ 3600 rpm–6 Kw
Governed power rating @ 3200 rpm–5.2 Kw 7.6hp
Torque @ 3200 rpm 16.9 Newton metres (12.5 ft./lbs.)

Air cleaner / Silencer
Specially designed HOWARD products

Clutch
Loose belt tightened by moving jockey pulley

Transmission
Twin ratio drive pulley with two forward and one reverse gearbox provides @3200 engine rpm:–

	Inner belt position	Outer belt position
First	1.3 km/h (.86 mph)	2.8 km/h (1.9 mph)
Second	2.5 km/h (1.6 mph)	5.8 km/p (3.6 mph)
Reverse	2.3 km/h (1.4 mph)	5.1 km/p (3.2 mph)
Upper pto shaft rpm	358	785
lower pto shaft rpm	633	1389
Rotor speed 12/15	149	—
15/12	238	—

Wheels
Agricultural tread – 5.00 x 8,4 ply rating tyres. Tyre pressure 1.4 kg/sq. cm (20 psi)
Adjustable wheel width setting 369mm (14½ inches) to 445mm (17½ inches) track centres.

Rotors
With blades– 41cm (16 inches) or 61cm (24 inches) tillage widths
With tines–91cm (36 inches) tillage widths.

Tillage depth
Adjustable down to 197mm (7¾ inches) in 10mm (⅜ inch) steps.

Controls
Handle bars adjustable for height
Handle bar side swing lever
Gear lever
Clutch lever
Throttle lever incorporating engine cut out switch
Rotor depth control lever
Rotor drive lever

Lubricants
Engine–as per manufacturers instruction book
Gearbox–Esso GP 85W/140 or equivalent and Capacity 3½ litres (0.8imp. gall.)
Rotor gearbox–SAE 30 Capacity 0.5 litres (0.9 pints)
Chain–Graphite grease

Serial number
The serial number of the tractor units is stamped on a plate fixed to the rear of the handle bar pivot support tube. The serial number of the rotor is fixed to the left hand side plate. For future reference record the serial numbers in the spaces below;

Dragon serial number . . . . . .

Rotor serial number . . . . . .

Date purchased . . . . . .

Width . . . . . .

Handle bars

The handle bars can be set at six different heights:—

A1 — 83cm (33 inches)	B1 — 116cm (46 inches)
A2 — 94cm (37½ inches)	B2 — 127cm (50 inches)
A3 — 106cm (42 inches)	B3 — 137cm (54½ inches)

To alter the height:—

Remove the 2 M12 setscrews and flat washers (C) and slacken the2 M12 setscrews (D)

Re-arrange the handle bars as required

Replace and tighten the setscrews (C-D) to a torque of 10Mkp (72.3lb/ft)

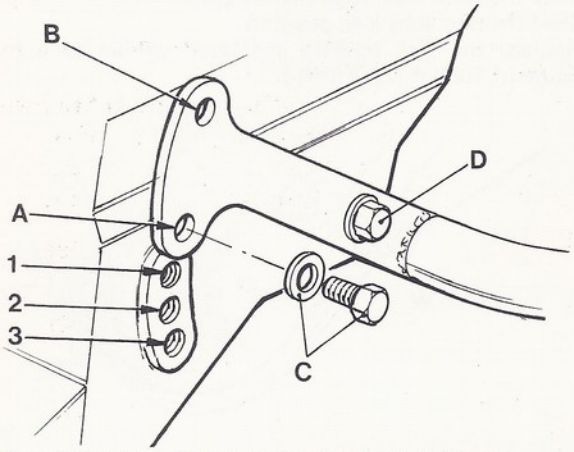

The handle bars can be set at six alternate positions:—

1 Forward

2 35° to the left } to allow the machine to be used
3 35° to the right } without walking on the cultivated soil.

4 90° to the left } to enable easy removal of the wheels
5 90° to the right } using the handle bars as a prop.

6 Backwards

NOTE With the handle bars in this position:— forward becomes reverse
reverse becomes forward

No upper pto drive is possible but the lower pto drive shaft can be used. This position may be favoured when driving to and from the plot with a rotor unit fitted, due to the resulting better balance.

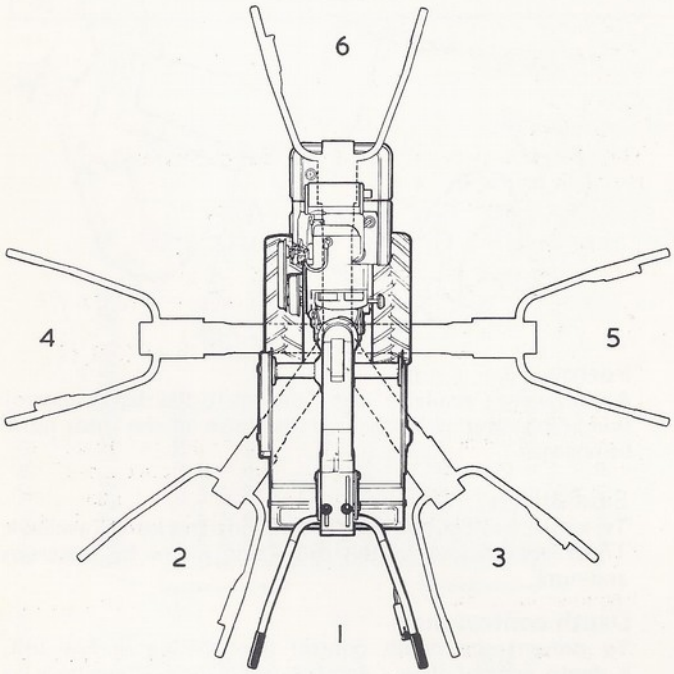

To obtain an alternative setting:—

Lift the control lever (E) and swing the handle bars into the required setting. Lower the lever so that the spring loaded plunger locks the handle bars in position

Gear lever

The gear lever (F) has four positions to provide:— reverse —neutral—fast—and slow gear. These are selected with the clutch lever in the lowered position and the action of moving the gear lever into reverse automatically disengages the drive to the upper pto shaft. When moving into a forward gear again it will be necessary to re-engage the drive.

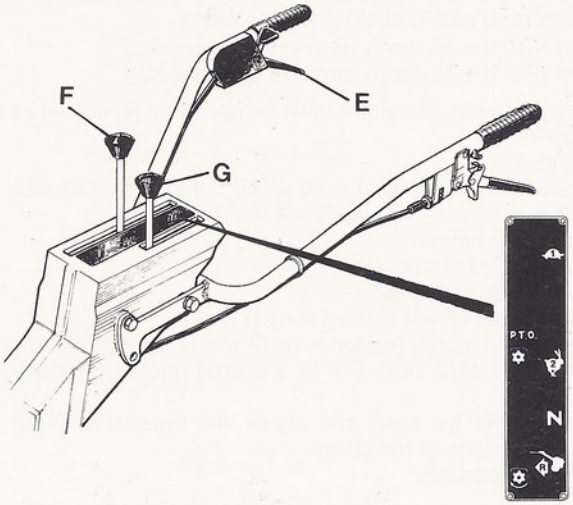

PTO lever

The pto lever (G) has two positions—Forward—disengaged Backward—engaged

Gear lever control cables

Adjustment should only be necessary when replacing cables

With the gear lever in neutral the distance between the anchor plate (H) and operating plate (J) should be 30mm (1 3/16 inch).

To achieve this setting:—

Move the gear lever forward as far as possible

Remove the counter sunk screw (K)

Remove the spirol pin (L) and the operating plate (J)

Remove the spring and rotate the cable end (M)

One rotation of the cable end moves it along 1mm

Replace the spring, pin, operating plate and counter sunk setscrew.

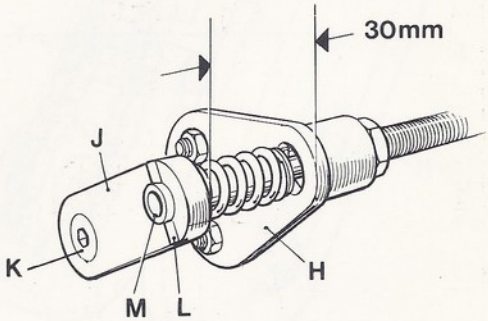

With the P.T.O. lever in the engaged position the distance between the anchor plate (N) and operating plate (O) should be 25 mm (1 inch).

To achieve this setting:—

Remove the cover.

Hold the cable steady with a 5mm A/F spanner.

To increase the gap:-

Slacken the M6 nut (P).
Tighten the M6 nut (Q)

To reduce the gap:-

Slacken the M6 nut (Q).
Tighten the M6 nut (P)

Replace the cover.

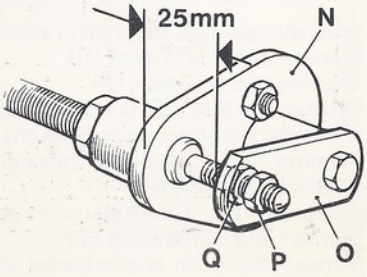

Rotors

Three rotor units are available—41cm (16 inches) and 61cm(24 inches) bladed rotors. 91cm (36 inches) tine

The rotor must only be used with the drive belt in the low speed range, inner position.

Two rotor speeds are possible depending on the position of the interchangeable chain drive sprockets.

238rpm with the 15 tooth sprocket uppermost.
149rpm with the 12 tooth sprocket uppermost.

To minimise wear the chain must be correctly tensioned as follows:—

Chain Tension

The chain is correctly tensioned when the total side to side movement is 10mm—12mm (3/8 —½ inch).

To adjust the chain:—
Remove the 2 M12 nuts (R)
Remove the chaincase (S)
Slacken the 2 M12 self locking nuts (T)
Re-arrange the chain tensioner until the tension is correct
Tighten the 2 M12 nuts (T) to a torque figure of 10Mkp (72.3 lb/ft.)
Turn the rotor by hand and check the tension at three different positions of the chain
Re-adjust if necessary

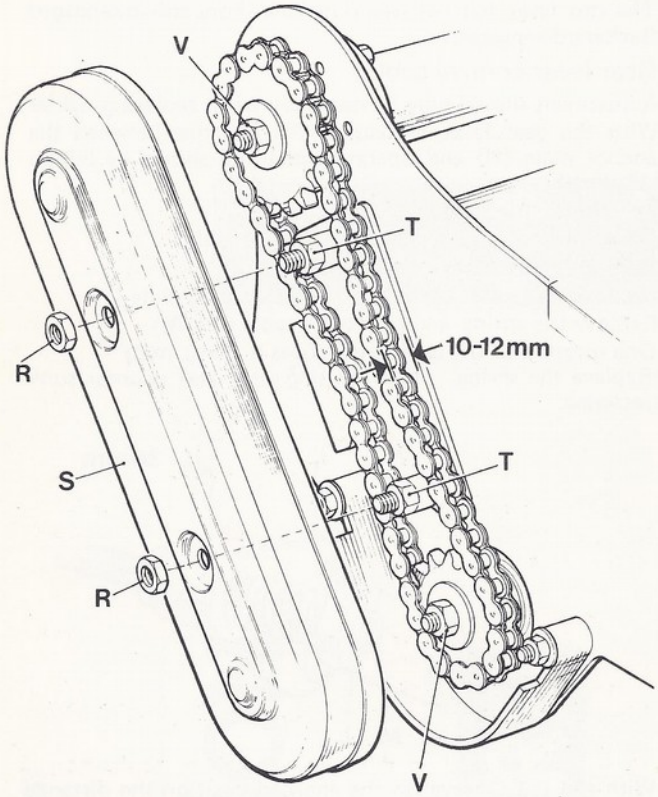

Replace the chaincase (S) Make certain the sealing strip is in position, and replace the nuts (R) Tighten the nuts to a torque figure of 10Mkp (72.3 lb/ft)

Interchanging the rotor drive sprockets

Remove the 2 M12 nuts (R)
Remove the chaincase (S)
Slacken the 2 M12 self locking nuts (T)
Move the tensioner away from the chain
Remove the 2 M12 self locking nuts (V) special washers sprockets and chain.
Interpose the sprockets and chain, replace the special washers and self locking nuts
Tension the chain as mentioned above

Wear shoe

To prolong the lift to the chaincase a wear shoe is fitted. Since this is in contact with the soil it will eventually wear through and if not replaced in time, the chaincase will wear through also, allowing dust and dirt to enter with consequent damage to the chaincase components which will then need replacing. It is cheaper to replace the wear shoe as mentioned below than the side drive components.

To replace the wear shoe:—

Remove the 2 M12 nuts (W) and flat washers
Slide the worn wear shoe off the bolts
Slide the new shoe into position
Replace the flat washers and nuts, tighten to a torque figure of 10Mkp (72.3 lb/ft.)

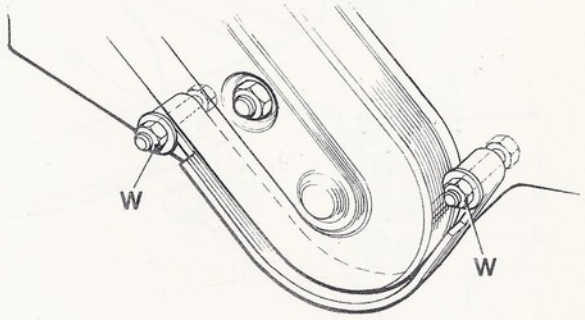

Blades

The efficiency of the machine will greatly depend on the condition of the blades. The self sharpening hoe blades must be correctly fitted to the rotor so that they enter the soil at regular intervals to even out the load on the transmission. Any badly worn, bent or damaged blades must be promptly replaced.

Blade fitting

Fit the blade to the rotor as indicated in the diagram: Use only HOWARD blades and blade bolts which have the correct shank length and tensile strength. The head of the bolt must be against the blade, the spring washer and nut against the flange, tightened to a torque figure of 12.4Mkp (90.2 lb/ft.)

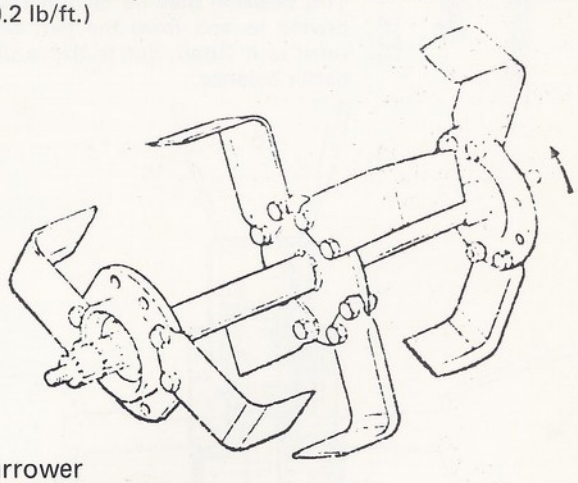

Furrower

A furrower is available and slides on to the depth control skid. When this is being used the drive to the rotor must be engaged.

Side shields

To prevent soil splash onto plants side shields are available These are secured to the rotor side plates by setscrews and nuts.

Depth control shoe

To prevent the depth control skid sinking in fine soil, a depth control shoe - 4cm(1 9/16 inch) wide is available as an optional extra and clamps to the bottom of the depth control skid.

All these items are illustrated on page 26

Weed cutter blades

To reduce the build up of weeds and trash around the rotor which could result in extra power required to turn it, adjustable weed cutting blades are fitted at each side of the bladed rotors. These should be adjusted so that they are just clear of the shearing blades. To adjust:–

Bend back the locking plate (X)

Slacken the M8 setscrews (Y)

Re-arrange the blades (Z).

Turn the rotor by hand to check the setting – tighten the setscrews to a torque figure of 2.9 Mkp (21.1 lb/ft.). Bend over the corners of the locking plate to prevent the setscrews moving.

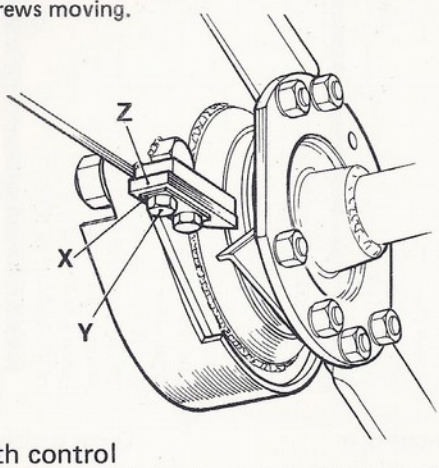

Depth control

The rotor working depth is controlled by a skid which can be set in three positions for use:–

(1) In normal conditions
(2) Where a large amount of trash is present
(3) In hard ground when penetration is difficult

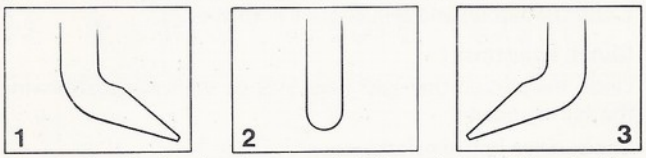

Two holes in the depth control skid and six settings in the rotor hood allows for 10 settings 1 cm (⅜ inch) apart, plus two at the extremities 2cm (¾ inch) apart

To alter depth of rotavation:–

Move the handle (AA) to the left against the spring until the locking pin (AB) disengages from the setting holes.

Raise or lower the depth skid as required.

Release the handle until the locking pin engages in the setting hole

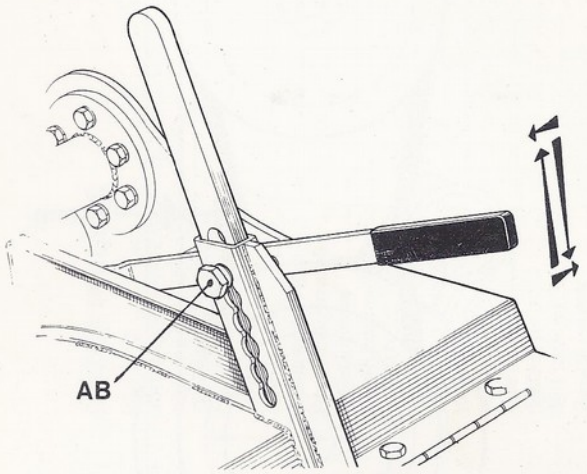

To use the alternative settings of the skid:–

Remove the M12 nut spring washer and locking pin (AB)

Remove the skid and refit in the required position

Refit the locking pin, spring washer and nut and tighten to a torque figure of 10 Mkp (72.3 lb/ft)

Tines

The tine rotor is designed for fast speed secondary tillage for quickly preparing a seedbed. When replacing tines, the short tines are fitted to the end flanges only.

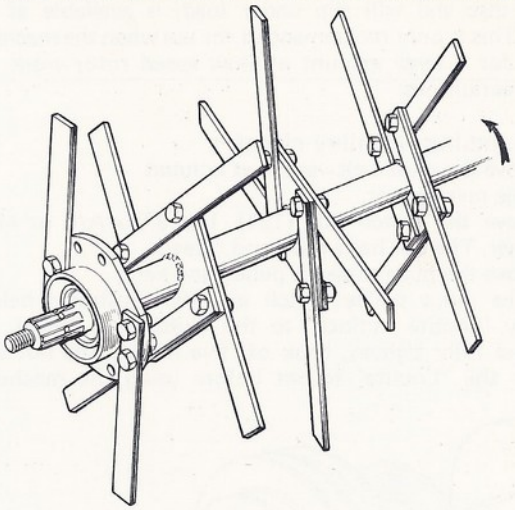

The tines must be fitted to the rotor so that all of the tine enters the soil and not the corner of the rotor and then the flange and then the tine. Only use HOWARD bolts which have the correct shank length and tensile strength. Tighten the nuts to a torque figure of 5.7 Mkp (41.5 lb/ft.)

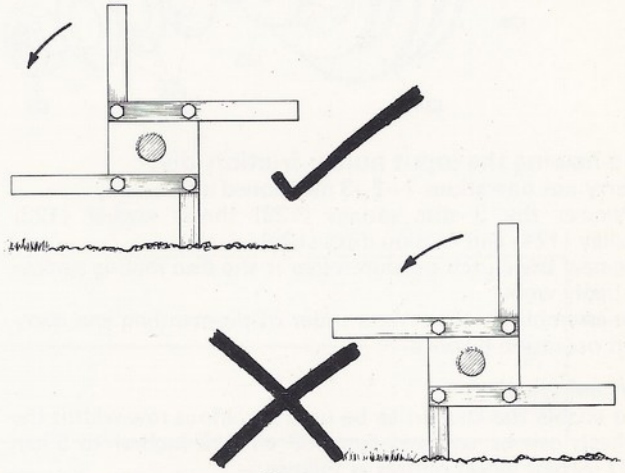

Changing the rotor units

Engage second gear and move the pto lever backwards to the 'engaged' position

Remove the 4 M12 nuts (AC)

Remove the rotor unit

Offer up the alternative rotor unit and turn the rotor by hand to line up the splines

Replace the 4 M12 nuts

Tighten the nuts to a torque figure of 10 Mkp (72.3lb/ft)

Move the gear lever to neutral

Move the pto lever to the forward position to disengaged the drive

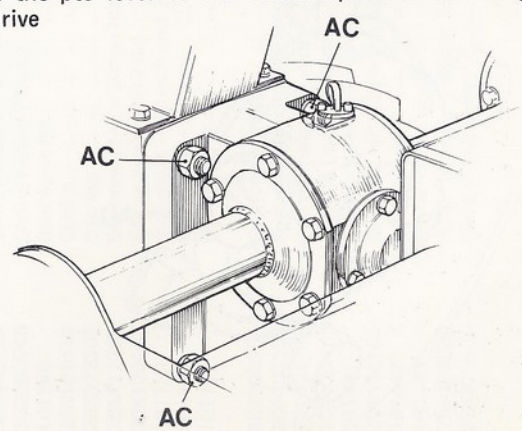

Input pulley clutch

When using the slow rotor speed, more torque is transmitted. To protect the rotor drive chain a safety input pulley, which incorporates a replaceable spring loaded friction disc and will slip under load, is available as an option. This is only recommended for use when the machine is used for a large amount of slow speed rotor work, in adverse conditions.

Fitting the input pulley clutch

1 Remove the drive belt – see next column
2 Engage reverse gear.
3 Remove the clutch nut (121). Use a 13/16 A/F or M46 spanner. The nut has a left hand thread.
4 Remove the pulley spacer, pulley and key.
5 Fit the input pulley clutch in order illustrated below
6 Apply 'Loctite nutlock' to the clutch nut thread, refit and fully tighten, back off five flats of the nut and allow the 'Loctite' to set before using the machine.

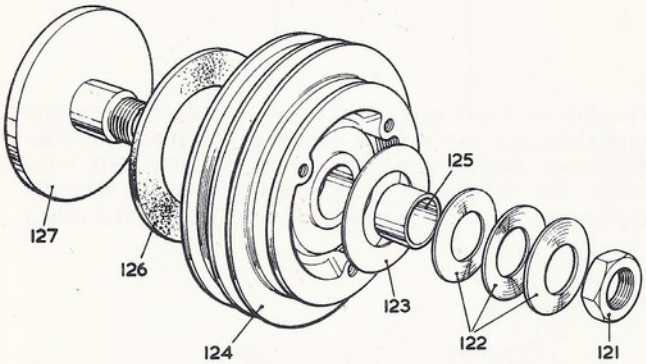

Re-newing the input pulley friction disc

Carry out operations 1–2–3 mentioned above.
Remove the 3 disc springs (122) thrust washer (123) pulley (124) and friction discs (126).
Re-new the clutch pressure plate if the disc mating surface is badly worn.
Re-assemble in the reverse order of dis-mantling and carry out operation 6 above.

Wheel width

To enable the Dragon to be used at various row widths the wheels can be adjusted from 38 cm (15 inches) to 53cm (21 inches) wheel centres as follows:–
Slacken the M10 nut (AD) until it is flush with the end of the cotter pin
Hit the nut and cotter pin to free it from the hub
Re-arrange the wheel as required
Tighten the M10 nut to a torque figure of 10Mkp (72.3 lb/ft.)

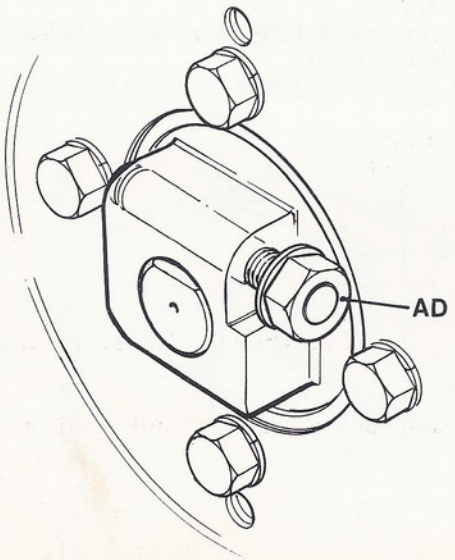

Before making any adjustments–
SWITCH OFF THE TRACTOR ENGINE

Clutch

The clutch mechanism comprises a cable and spring loaded jockey pulley to tighten the driving belt. This belt can be fitted in one of two positions to provide a range of travel and pto speeds.

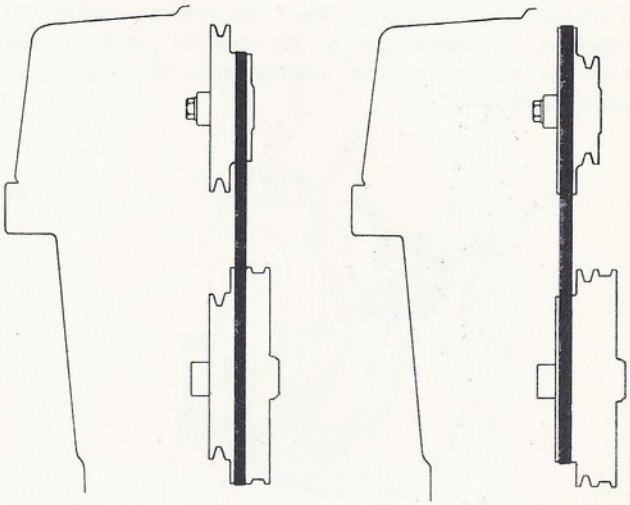

Inner position Outer position

Changing the drive belt

Undo the clip on the right hand side of the fairing and swing the fairing open. Remove the belt off the larger pulley onto the smaller pulley and then onto the corresponding large pulley
Close the fairing and secure shut with the clip

Clutch adjustment

Undo the clip on the right hand side of the fairing and swing the fairing open

Check drive belt tension:–
Disengage clutch.
Place straight edge along side belt and pullies and measure the free play between the pullies which should be 34mm (1⅜ inches).

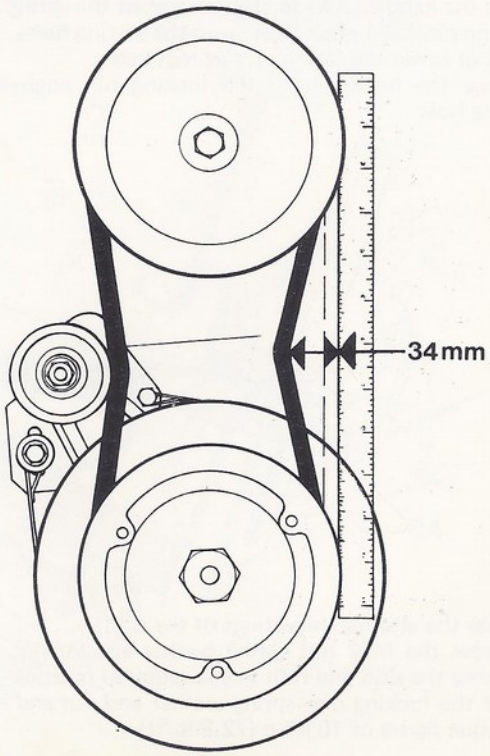

To adjust the drive belt:–
Slacken the M12 nut (AE) and move the jockey pulley (AF):–
Inwards to reduce the gap
Outwards to increase the gap
Tighten the nut to a torque figure of 10Mkp (72.3 lb/ft.)

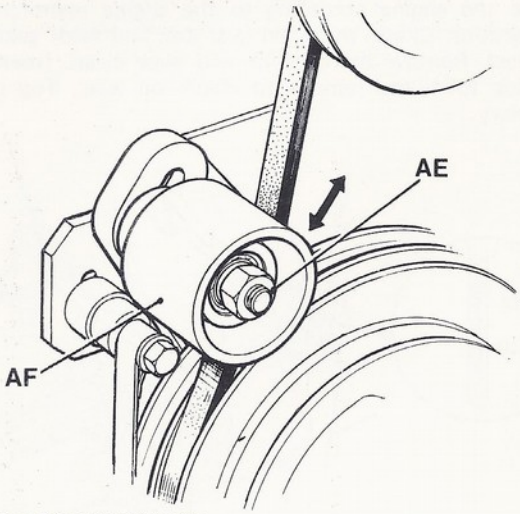

Clutch cable adjustment:–
To operate effectively the clutch outer cable must not be too tight.
To check and adjust:–
Push the cable into the sleeve as far as possible

Grip the cable close to the sleeve and pull the cable out as far as possible.
The distance should be:–
no less than 3mm (⅛ inch)
nor more than 6mm (5/16 inch)

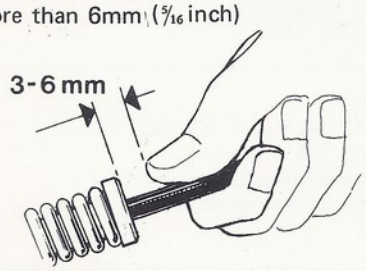

Adjustment:–
Slacken the knurled nut (AG)
To increase the distance–
Rotate the knurled nut (AH) anti clock-wise
To reduce the distance–
Rotate the knurled nut (AH) clock-wise
Tighten the knurled nut (AG)

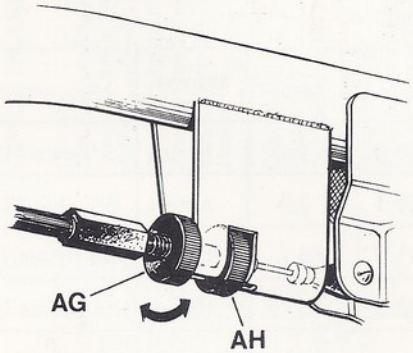

Brake band

To achieve easier gear selection there is a brake band acting on the gearbox input pulley which automatically comes into operation when the clutch lever is lowered thus stopping the gear train. On lifting the clutch lever to transmit the engine power the brake is automatically disengaged and the setting is the same for either belt position.

Brake band adjustment
After checking the belt tension and cable free play–check the brake band setting. Lower the clutch lever.
The distance between the jockey pulley arm (AJ) and brake band peg (AK) must be at least 3mm (⅛ inch).

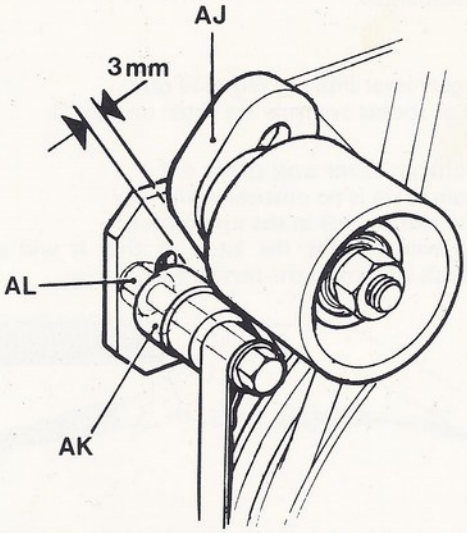

To adjust:–
Slacken the M8 nut (AL) and move the peg:–
Up to reduce the distance.
Down to increase the distance.
Tighten the nut to a torque figure of 2.9 Mkp (21.1 lb/ft.)
Close the fairing and secure with the clip

Front weights

To aid stability, front weights illustrated on page 14 – are available as optional extras, and fit inside the fairing. Each weight weighs 5.4Kg (12 lbs.) and a maximum of four can be fitted. These are secured in position by 3 M12 nuts tightened to a torque figure of 10Mkp (72.3 lb/ft).

Ancillary equipment

To increase the versatility of the DRAGON various ancillary items are available.

These include:–

Single furrow plough
Single furrow reversable plough
Rotary grass cutter
Sickle bar mower
Trailer hitch
Free wheel device
Wheel weights
Large wheels – 600 x 6.50 These will increase the tractor speed by x 1.3

For further details contact your HOWARD Distributor or Dealer

Using the machine
Before attempting to use the machine read the section on Operation on page 10 and Hints and Tips below
Make certain the Initial Service mentioned opposite has been carried out and the fairing is firmly in position.

Set the handle bar height and position
The handle bars can be set at six heights and six positions as mentioned on page 3.

Start the engine
Information on starting and operating the engine will be found in the engine manufactures instruction book supplied with the machine. It will be necessary to open the fairing to turn on the fuel tap.

Driving
Move the gear lever into the required gear
The range of speeds available are listed on page 3.

Lift the clutch lever and drive off
Make certain there is no obstical in the way
To lock the clutch lever in the up position:–
Raise the lever and lift the latch so that it will engage with the hook welded to the handle bars.

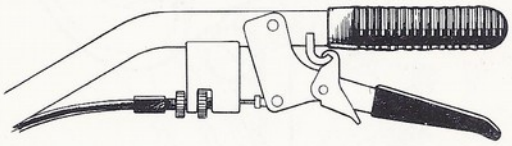

It is not advised to lock the clutch lever in the 'UP' position when reversing in confined areas.

To un-lock the clutch lever from the up position:–
Raise the lever until the spring loaded latch dis-engages with the handle bar hook.

Stopping the machine
lower the clutch lever

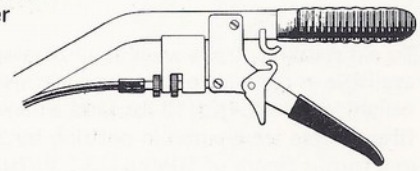

Stopping the engine
Move the throttle lever upwards, sideways to the left and upwards to the top of the gate

Rotavating
When at the plot STOP THE MACHINE AND ENGINE
Check the drive belt is on the inner pullies see page 6.
Select the rotor depth–see page 5
Move the pto lever into drive–see page 3
Drive as mentioned above
If the machine fails to operate as expected, read the section on Operation on page 10 and Rotors on pages 4 & 5

Hints and tips
Do not tax the machine during the first 25 hours work but use it on light work to allow the machine to 'bed down'
Do not allow the engine to labour–select a slower travel speed, or rotor speed or reduce the depth setting.
When ROTAVATING the machine may tend to jump in stoney ground. Do not press on the handle bars–the weight of the machine will keep it in the soil.

Before carrying out any repairs or adjustments to the Dragon move the throttle lever to the upper position to STOP THE ENGINE.

Initial Service
Check the engine according to the engine manufacurers instructions. Check the main gear box and rotor gear box oil level. Remove the dipstick and wipe clean. Insert the dipstick fully and remove to check oil level. Top up as necessary.

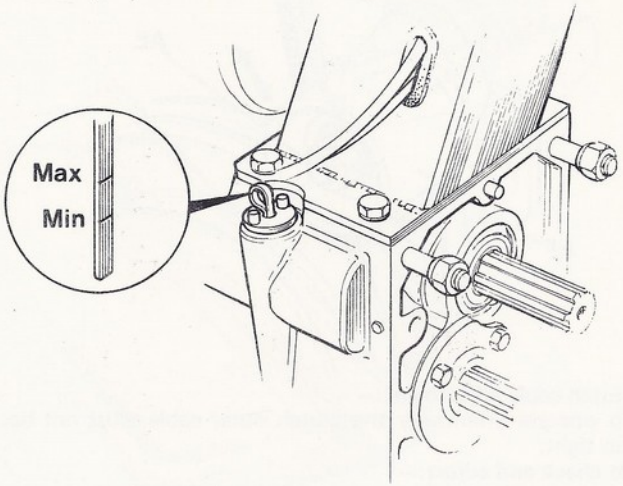

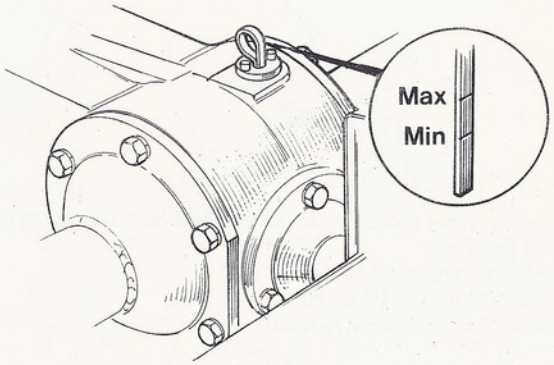

Check tyre pressure
Agricultural tread 1.4 kg/sq cm (20 psi)
Check clutch setting. See pages 6-7.
Oil all pivot points and control rod guides.
Grease nipple of handle bar column.

Tighten all nuts and bolts to the torque figures mentioned below.

Nuts and Bolts
Make certain that all nuts and bolts are tightened to the correct torque figure. If a torque wrench is not available, use a spanner of the length mentioned to obtain a suitable setting.
Torque settings

Nut size	lb/ft	Mkp	Spanner size	Spanner length
6mm	18.6	1.1	10mm	5 inches (12.5cm)
8mm	21.1	2.9	13mm	5 inches (12.5cm)
10mm	41.5	5.7	17mm	6½ inches (16cm)
12mm	72.3	10	19mm	14 inches (25cm)

For hoe blades and spike nuts and bolts, see pages 4 & 5.

Lubrication and maintenance

Before lubricating the Dragon STOP THE ENGINE
Recommended lubricants:—
Gearbox Esso GP 25W/140—or equivalent.
Pivots and slides SAE 30.
Chain — Graphite grease
Handle bar column —
Lithium base grease.

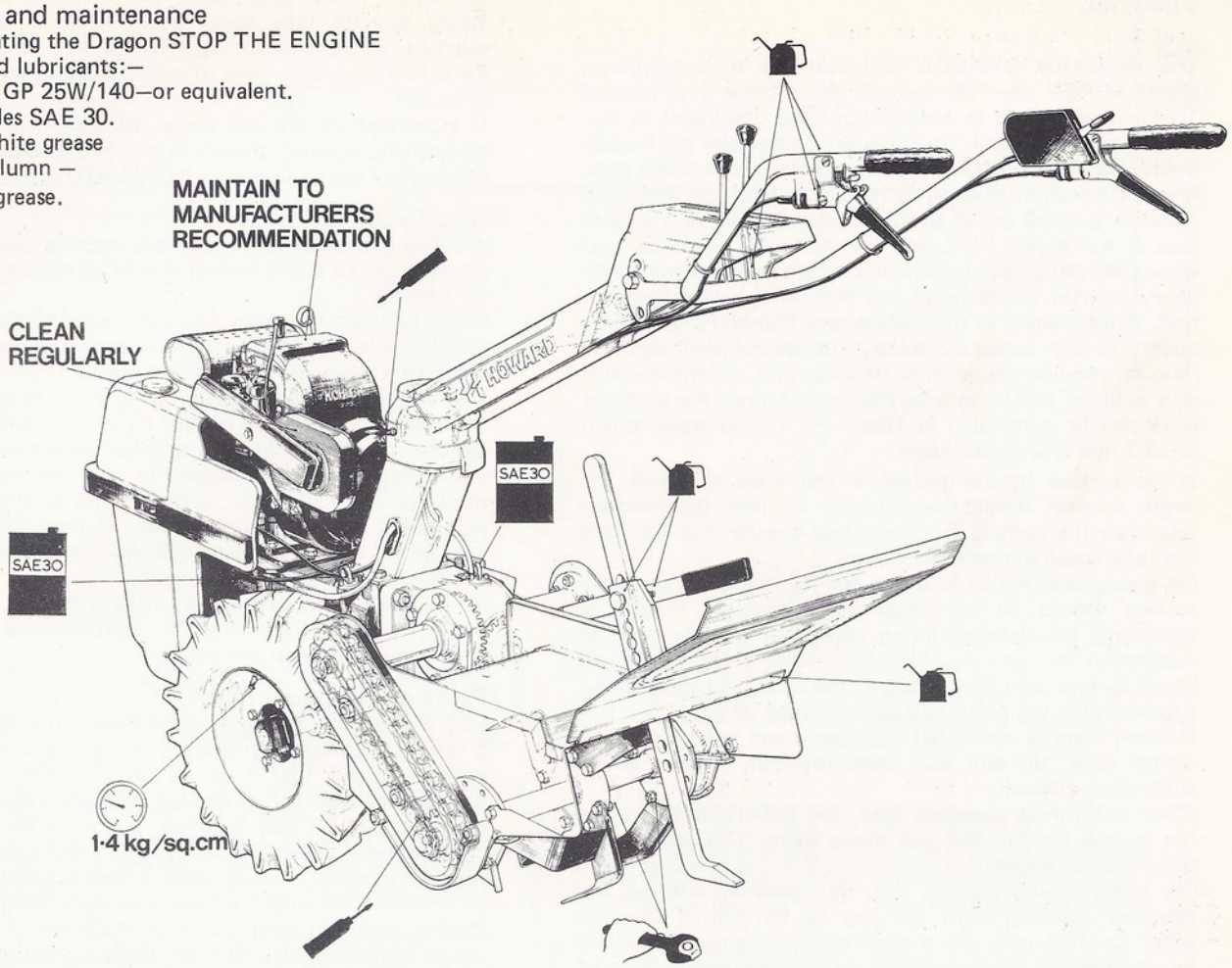

Capacities:—

Tractor gearbox	3½ litres (0.8 imp. gall.)
Rotor gearbox	0.5 litres (0.9 pints)

10 Hours or daily

Check engine oil level.
Check blade or tine bolts.
In dusty conditions — check air cleaner.

25 Hours or weekly

In addition to 10 hours maintenance.
Check clutch cable adjustment.
Service air cleaner.
Oil pivot points and slides.
Check tyre pressures.
Check gear box oil levels.

100 Hours or monthly

Lubricate chain.
Grease nipple of handle bar column.

500 Hours or six monthly

Drain gearboxes flush out and refill.

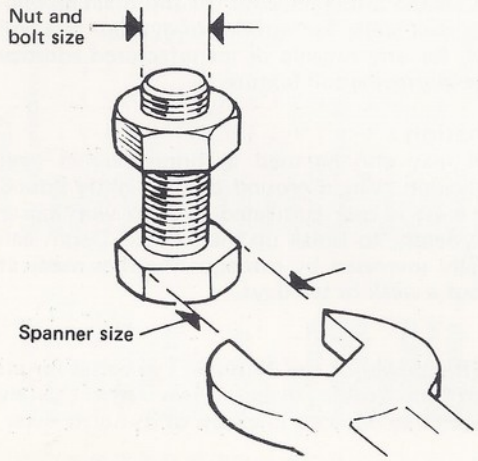

Servicing the air filter

Remove the wing nut and air cleaner lid.
Remove the foam filter, if possible, blow through with an air line or shake out, DO NOT DAMPEN.
Refit the filter.
Remove and examine the paper element.
Tap the hard edge of the element to remove any dry dirt or dust and replace if suitable. If still dirty or damaged— Fit a new element. Do not attempt to wash clean the element.
Re-fit the lid and wing screw.

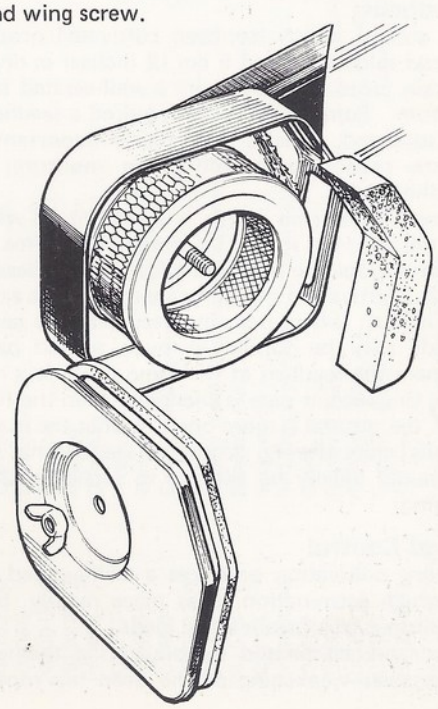

Operation

The HOWARD DRAGON will cultivate to a maximum depth of 19.7 cm (7¾ inches). An average first pass of 10 to 12 cm (4 to 5 inches) should be obtainable in previously cultivated soil. On some soils, especially the heavier kinds, the full depth will not be obtained in a single pass. Where cultivation in depth is needed, a first pass should be made at 7 to 10 cm (3 to 4 inches) followed by a further pass at full depth. First gear, low belt ratio, must be used when cultivating ground which is very hard or covered with heavy growths. Second gear, low belt ratio, for light cultivation. Always work in the highest gear that will produce the quality of tilth necessary. Always use second gear, high belt ratio for running the machine between jobs. A depth control skid is fitted, and by moving this up and down the depth of work can be controlled in 10mm (⅜ inches) stages down to 19.7 mm (7¾ inches) deep.

If the surface of the ground is very hard or baked, the depth control should be adjusted so that the machine just bites the surface. Further passes should then be made until the required depth is reached.

On heavy land which is to be laid up for the winter, the surface should be left rough. By using the ridging or furrowing attachment during this final or late autumn cultivation the land can be left in ridges so that the maximum surface area is exposed to the effects of weathering. Alternatively, the plough attachment may be used.

If heavy land is cultivated too finely and left bare to the winter rains, the soil may pack together, making spring cultivation difficult.

When cultivating ploughed land, the DRAGON should be run across the furrows, not along them. This will ensure complete cultivation.

On hilly ground always run the machine around the contour, working from the top to bottom of the hill. After the first cut, one road wheel can be run in the soil just worked, so that any tendency to slip will be countered by the wheel coming against a wall of uncut soil.

On light soil, two courses are open. The ground may either be left rough, or it may be cultivated to medium depth and sown to a green crop, such as rye. The green crop will prevent the leaching out of the nitrogen in the soil. In the early part of the year the crop is then turned in; more than one pass may be necessary. After a week or ten days, the spring seed bed may be prepared. This cultivation should be shallower than that used to work-in the green crops.

Seedbeds

On ground which has been cultivated properly, seedbeds should seldom exceed 5 cm (2 inches) in depth, except for certain crops. Seeds require a well-aerated soil with a firm bottom. Some small seeds required a seedbed to be lightly consolidated. This is particularly important on light soil, where consolidation will bring moisture nearer to the seedling plant.

Competition from weeds is most critical when the crop is at the seeding stage. To obtain weed-free seedbeds, the ground should be prepared a few weeks ahead of the sowing dates. Cultivation should be carried out at a depth of 10 cm (4 inches); this causes any weed seeds to germinate. These weeds may be turned in by a second pass, which will prepare the seedbed at the same time. It is most important that this second pass is shallower than the first. Remember that the ground is more open, so that the machine will tend to dig more deeply. When the seedbed has been prepared, it should ideally be allowed to settle for 24 hours before sowing.

Weed Control

Rotary cultivation produces a well-aerated warm seedbed in which germination takes place readily. Inevitably, such conditions also favour weed seeds.

Weeds are eliminated by preventing them seeding or by progressive weakening of the deep tap roots or rhizomes. Weeds are killed most easily and inexpensively by cultivating directly they show green. Annuals will be killed outright and perennials will be reduced until they too, die out. This is true even of such persistent weeds as couch or twitch.

If a particularly tall and dense infestation of weeds is to be tackled, as much growth as possible should be cut away and burned before using the ROTAVATOR.

Row-Crop Work

Working will be easier if rows are made as long as possible. At least 1m (3 feet 3 inches) should be allowed at each end for turning.

Weeds between rows may be controlled with the DRAGON. Ideally, this should be done when the weeds are small, but even a heavy growth can be turned in.

This will not prevent weeds growing in the rows themselves, such weeds must be controlled by hand-hoeing when they are still small. Should land become weed-infested because these weeds have been allowed to seed, the following crop should be a cleaning one, such as roots or potatoes, which will give a period of several weeks in the early part of the year when the weeds seeds will shoot and can be killed as described in the previous paragraph.

In planning your crops to make the best use of the DRAGON, allow 5 or 7 cm (2 or 3 inches) over the effective width on each side of the machine.

Hints on Cropping Layout

For the grower at home, mechanical cultivation requires a wider crop spacing than that for hand working. Experience shows that 1 m. (3 feet 3 inches) is the most suitable spacing. Tall crops, e.g. peas and beans, should be sown at 2 m. (6 feet 6 inches) centres, with intermediate crops at 1 m. (3 feet 3 inches) spacing, and either of a dwarf variety (if peas or beans) or of a similar height to cabbage or lettuce. This might suggest that more ground has to be cleared, involving additional time and labour. The DRAGON will make the passes that are necessary between rows so quickly and easily however, and without damage to the growing crop, that much time and effort will be saved, and will, in fact, allow the maximum amount of mechanical cleaning to be done while the crop is growing.

Commercial growers, of course, may well decide to plant at narrower spacings to obtain maximum possible yield per hectare.

Most growers, commercial and amateur, appreciate the need for a rotation of crops, and know that the same crop should not be planted in the same row season after season.

Green Manuring

Land not immediately required may be sown down to such crops as mustard or rye grass during spring and summer, or rye during the winter. These crops should be allowed to mature if they are to be used as green manures - they will then have the best effect on the soil. A winter cover crop will preserve plant foods which would otherwise be leached away so it need not be allowed to mature.

Mixing-In

The DRAGON will be found ideal for the thorough mixing-in of lime into acid soils, for working-in gypsum as a soil conditioner, or, for any organic or manufactured additive for fertilising or improving soil texture.

Land Reclamation

The DRAGON may also be used to bring derelict land back into cultivation. Virgin ground or soil tightly bound with roots or grass is best cultivated by first working at only a shallow depth, to break up the surface. Depth can then be gradually increased by subsequent passes made at intervals of about a week or ten days.

Conclusion

Never overtax the power of the machine. Far better results will be obtained from working in easy stages, rather than by forcing the machine to do work in excess of its horsepower.

Howard Dragon - Parts List

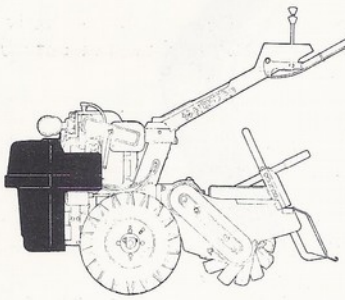

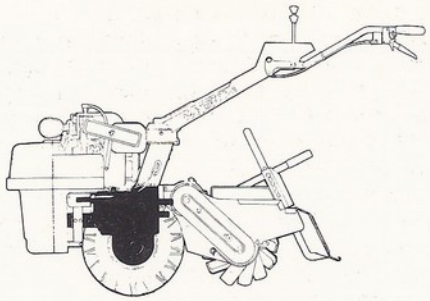

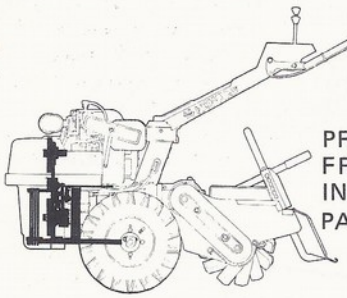

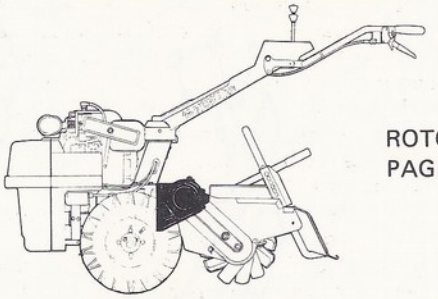

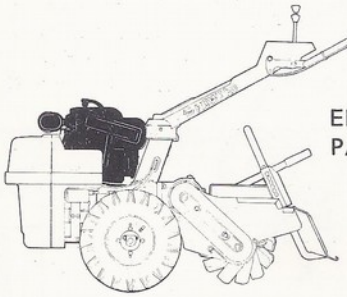

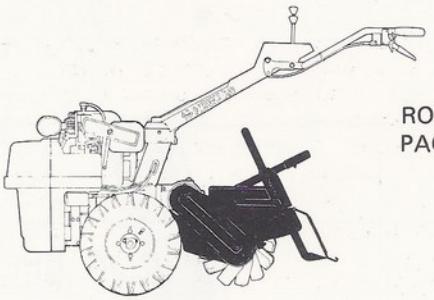

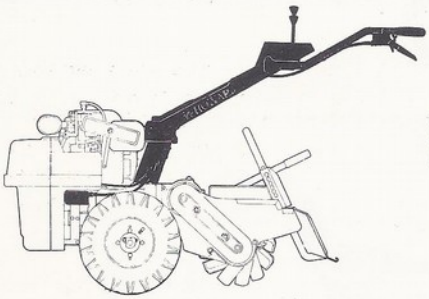

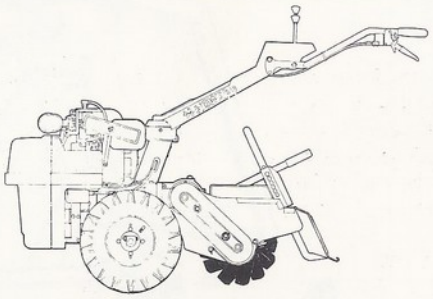

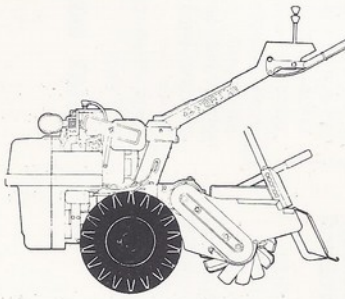

Howard Dragon - Parts List

824		12.79	12

FAIRING ASSEMBLY

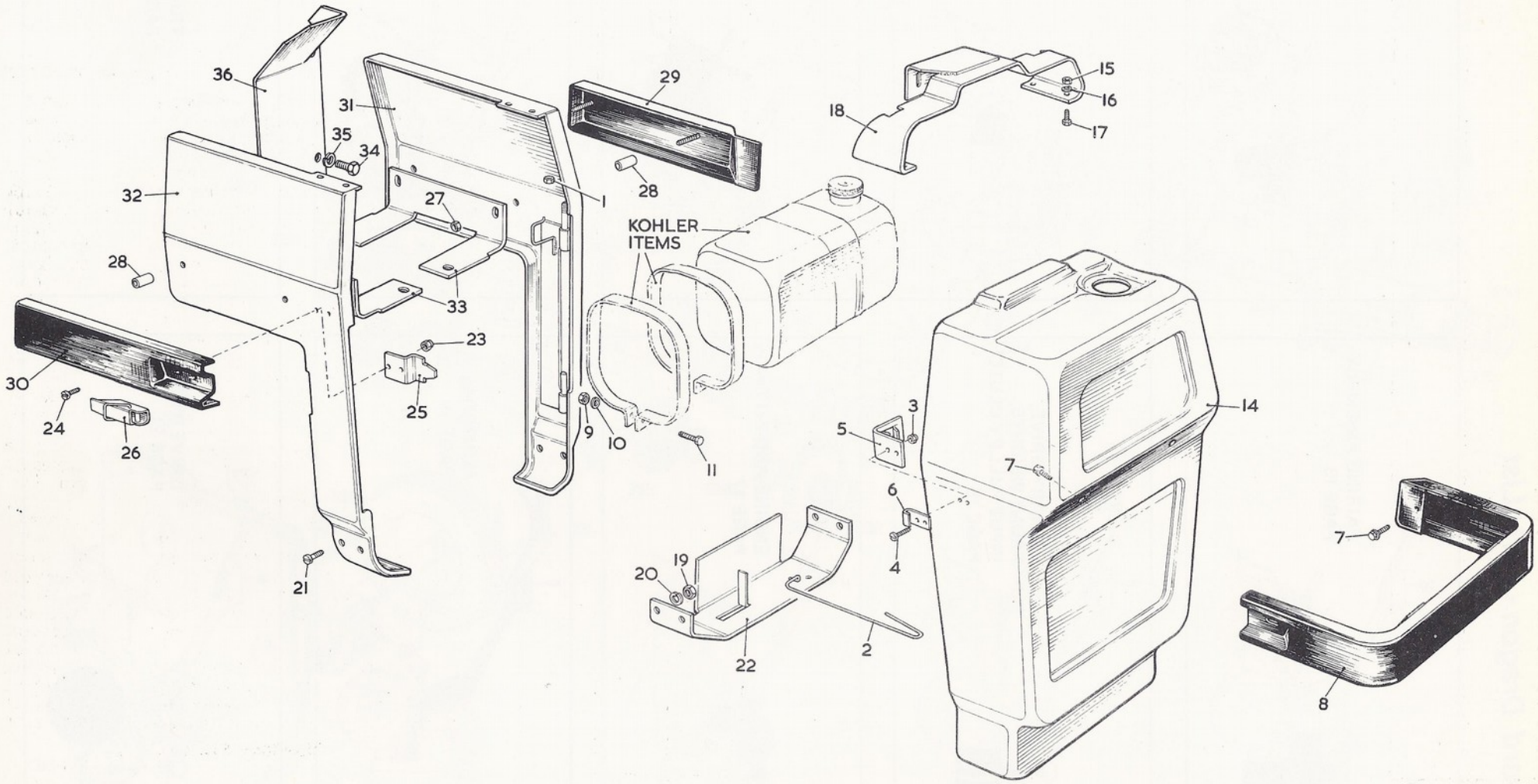

Illus. No.	Part Number	Description	No. off		

FAIRING ASSEMBLY

1	307206205	Self lock nut M6	1
2	101480	Fairing strap	1
3	307204055	Self lock nut M4	2
4	337404165	Screw pan head M4 x 16mm long	2
5	101362	Location bracket — female	1
6	208062100	Strike	1
7	208040275	Screw taptite M5 x 12mm long...	3
8	101455	Fairing trim	1
9	307206050	Self lock nut M6	2
10	308060010	Plain washer M6 dia.	2
11	301406200	Screw M6 x 20mm long	2
12 - 13 not allocated			
14	101121	Fairing	1
15	307206015	Nut M6	4
16	308060045	Spring washer M6 dia.	4
17	301406125	Screw M6 x 12mm long	4
18	101531	Top cover	1
19	307208015	Nut M8	4
20	308080045	Spring washer M8 dia.	4
21	337408165	Screw pan head M8 x 16mm long	4
22	101422	Bottom cover	1
23	307204055	Self lock nut M4	2
24	337404165	Screw pan head slotted M4 x 16mm long...	2
25	101423	Location bracket — male	1
26	208062090	Toggle latch	1
27	307206205	Self lock nut M6	4
28	203025255	Spacer	4
29	101481	Side trim L.H.	1
30	101482	Side trim R.H.	1
31	101454	Side panel L.H.	1
32	101123	Side panel R.H.	1
33	101536	Panel bracket	2
34	101406045	Setscrew ⅜ UNC x ½ inch long	2
35	108061125	Spring washer ⅜ inch dia.	2
36	101507	Pulley guard	1

37 - 50 not allocated

Illus. No.	Part Number	Description	No. off		

Howard Dragon - Parts List

824		12.79	14

PRIMARY DRIVE – INPUT PULLEY CLUTCH – FRONT WEIGHTS

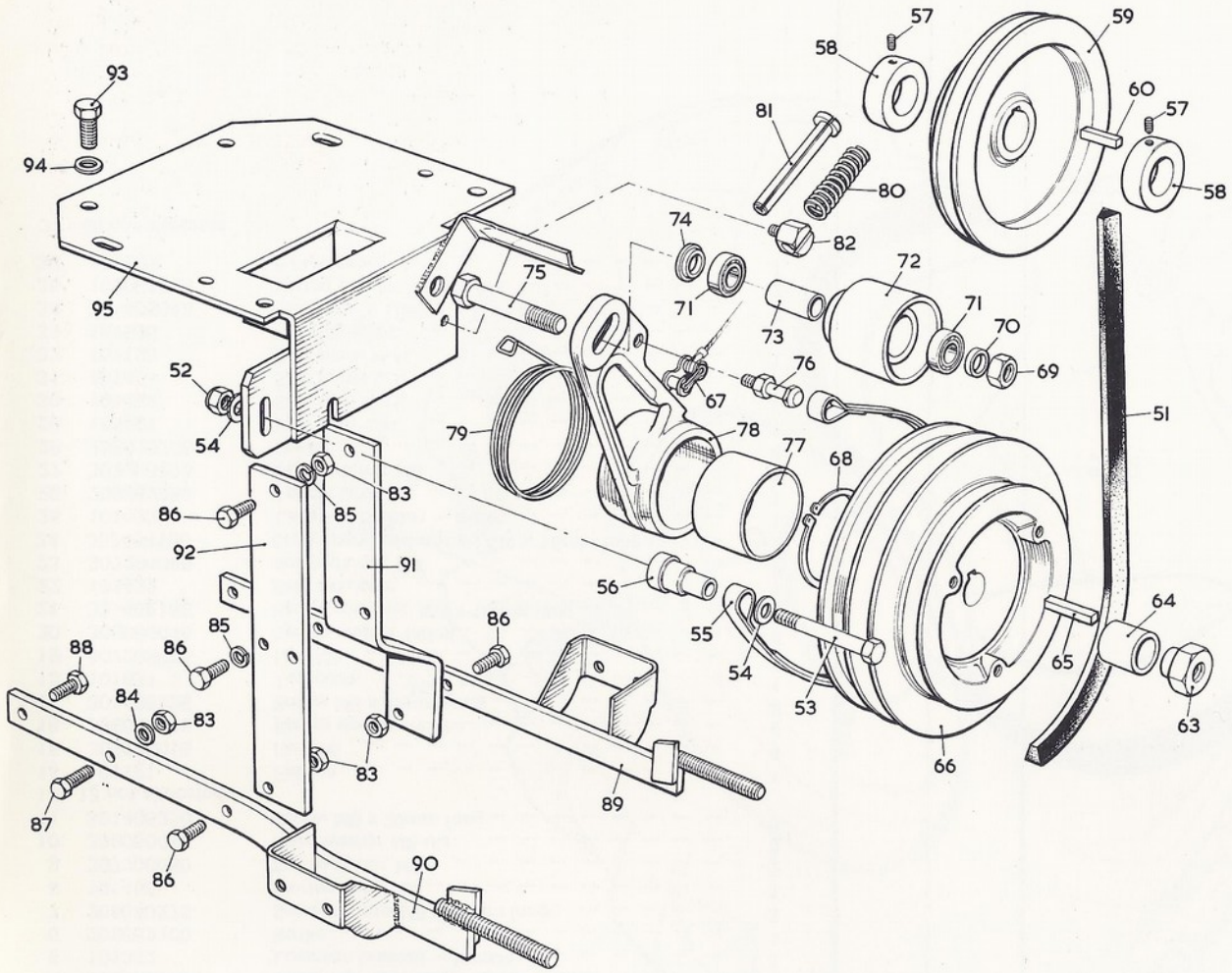

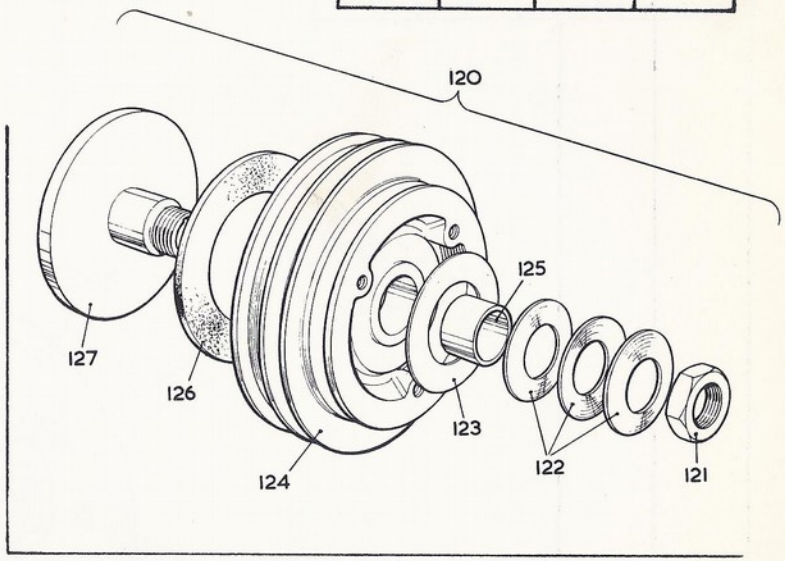

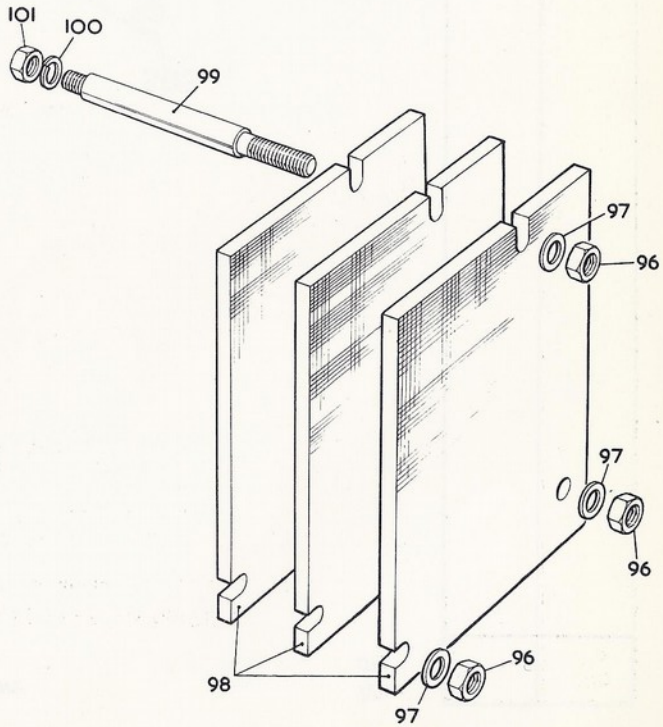

Illus. No.	Part Number	Description	No. off	Bulletin	Bin No.
		PRIMARY DRIVE			
51	204050310	Drive belt	1		
52	307208200	Self lock nut M8	1		
53	301208600	Bolt M8 x 60mm long	1		
54	308080015	Flat washer M8	2		
55	101016	Brake band	1		
		includes:—			
	101033	Brake band lining	1		
56	101011	Brake band peg	1		
57	313206120	Socket head grub screw M6 x 12mm long	2		
58	101509	Collar	2		
59	101007	Engine pulley	1		
60	101009	Key	1		
61 - 62 not allocated					
63	101018	Sleeve nut	1		
64	101019	Pulley spacer	1		
65	101010	Key	1		
66	101008	Pulley	1		
67	204023180	Connecting link	1		
		includes:—			
	204023190	Spring clip	1		
68	208102400	Circlip	1		
	101005	Jockey pulley arm	1		
		comprising:—			
69	307212010	Nut M12	1		
70	101022	Spacer	1		
71	251228081	Bearing	2		
72	101021	Jockey pulley	1		
73	101353	Bearing spacer	1		
74	101404	Spacer	1		
75	301212700	Precision bolt	1		
76	101023	Brake band peg	1		
77	101048	Bush	1		
78	101020	Jockey pulley arm	1		
79	101014	Torsion spring	1		
80	101415	Spring	1		
81	101413	Sleeve	1		
82	101414	Trunnion	1		
83	307208200	Self lock nut M8	5		
84	308080015	Flat washer M8	2		
85	308080040	Spring washer M8	6		
86	301408200	Setscrew M8 x 20mm long	8		
87	301408250	Setscrew M8 x 25mm long	1		
88	342408200	Self lock setscrew M8 x 20mm long	1		
89	101478	Fairing support L.H.	1		
90	101479	Fairing support R.H.	1		
91	101384	Engine mounting support	1		
92	101385	Engine mounting strip	1		
93	342410250	Self lock setscrew M10 x 25mm long	2		
94	308100010	Flat washer M10	2		
95	101013	Engine base plate	1		

Illus. No.	Part Number	Description	No. off	Bulletin	Bin No.
		FRONT WEIGHTS ASSEMBLY			
	101537	Front weights assembly	1		
		Comprising:—			
96	307212205	Self lock nut M12	3		
97	308120015	Flat washer M12 dia.	3		
98	101420	Front weight	4		
99	101532	Weight steady	1		
100	308120045	Spring washer M12 dia.	1		
101	307212015	Nut M12	1		
102 - 119 not allocated					
		INPUT PULLEY CLUTCH			
120	101006	Input pulley clutch	1		
		comprising:—			
121	101026	Clutch nut L.H. thread	1		
122	208051630	Disc spring	3		
123	255578011	Thrust washer	1		
124	101024	Input pulley	1		
125	253539201	Bush	1		
126	607	Disc	1		
127	101025	Pressure plate	1		
128 - 152 not allocated					

Howard Dragon - Parts List

824		12.79	16

ENGINE AND FITTINGS

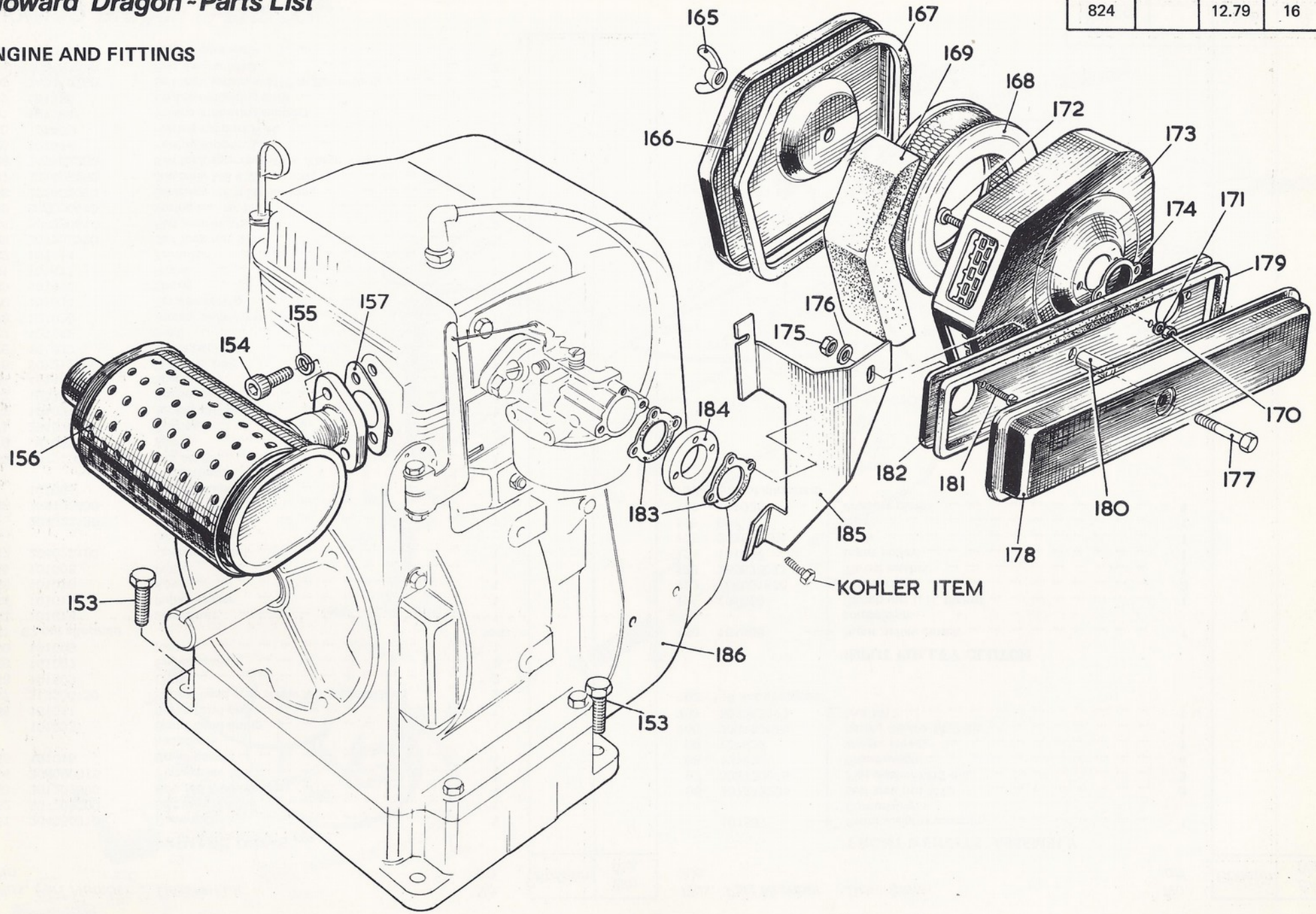

Illus. No.	Part Number	Description	No. off	Bulletin	Bin No.
		ENGINE AND FITTINGS			
153	342410305	Self lock setscrew M10 x 30mm long	4		
154	147405060	Capscrew 5/16 UNC x ¾ inch long	2		
155	108050940	Spring washer 5/16 inch dia.	2		
156	101298	Muffler	1		
157	203231090	Muffler gasket	1		
158	164 not allocated				
165	307406095	Wing nut	1		
166	101036	Air cleaner lid	1		
167	101037	Air cleaner seal	1		
168	203034150	Element	1		
169	101038	Air filter pre-cleaner	1		
170	107208200	Nut No. 8 UNC	2		
171	108030540	Spring washer No. 8 UNC	2		
172	133408040	Slotted cheese head screw No. 8 UNC x ½ inch long	2		
173	101035	Air cleaner	1		
174	101299	Gasket	1		
175	307306055	Self lock nut M6	1		
176	308060015	Plain washer M6 dia.	1		
177	301306405	Bolt M6 x ·75 x 40mm long	1		
178	101487	Air box	1		
179	101488	Air box gasket	1		
180	101495	Spacer	1		
181	103408070	Screw No. 8 UNC x ⅞ inch long	3		
182	101490	Support plate	1		
183	101491	Gasket	2		
184	101489	Spacer	1		
185	101493	Support bracket	1		
186	101045	Kohler engine – SPEC K181T	1		
187 -199	not allocated				

Illus. No.	Part Number	Description	No. off	Bulletin	Bin No.

Howard Dragon - Parts List

824		12.79	18

CONTROLS

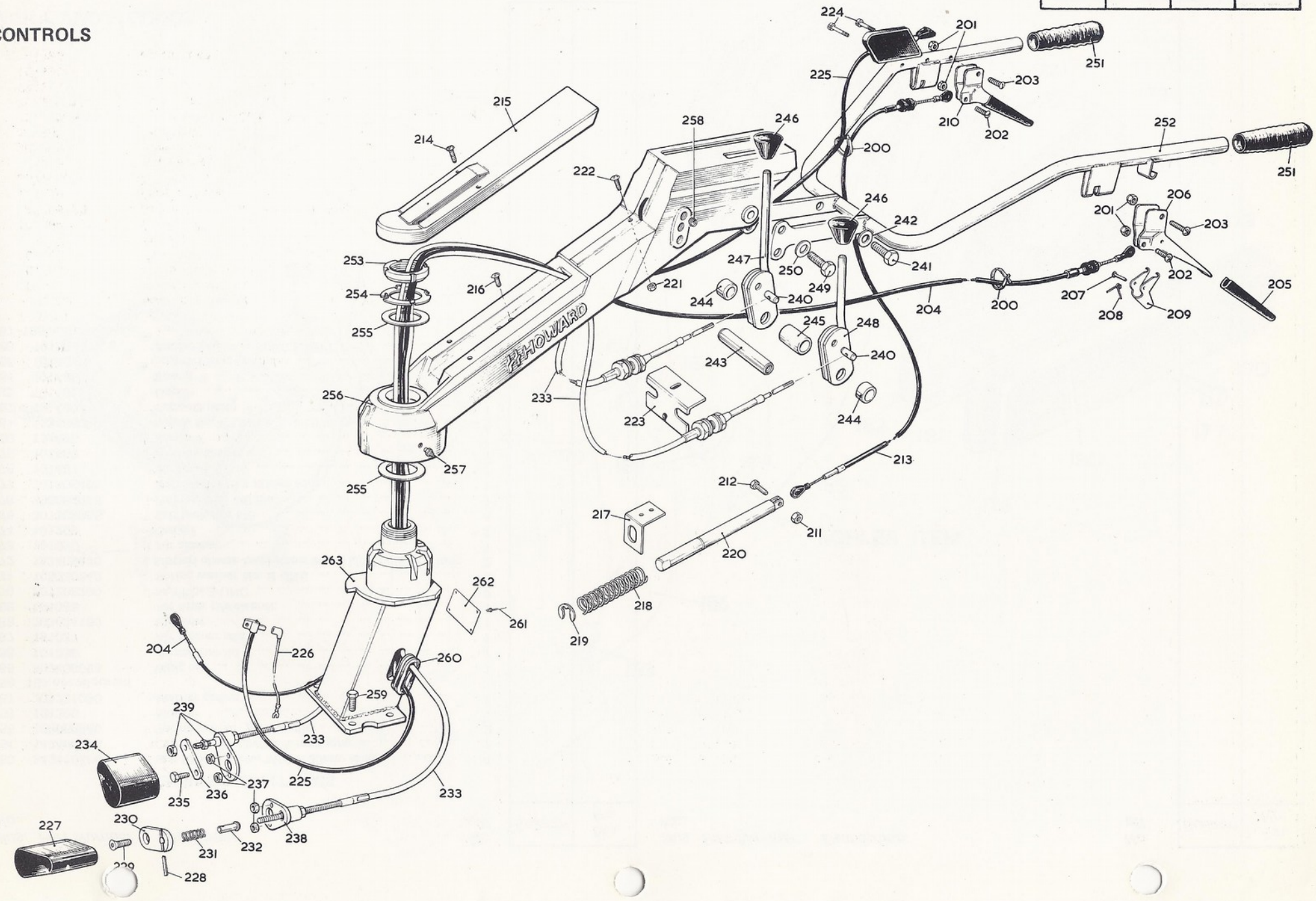

Illus. No.	Part Number	Description	No. off	Bulletin	Bin No.
		CONTROLS			
200	207027180	Cable tie	2		
201	320206010	Self lock nut M6	4		
202	337406205	Screw pan head M6 x 20mm long	2		
203	337406355	Screw pan head M6 x 35mm long	2		
204	101280	Clutch cable	1		
205	101257	Lever grip	2		
206	101467	Clutch lever includes:—	1		
207	208021655	Rivet 5/32 x 7/8 inch long	1		
208	101468	Return spring	1		
209	101466	Catch lever	1		
210	101256	Control lever	1		
211	307206015	Nut M6	1		
212	325406255	Self lock setscrew M6 x 25mm long	1		
213	101449	Plunger control cable	1		
214	337406255	Screw pan head M6 x 25mm long	2		
215	101246	Cover	1		
216	337406165	Screw pan head M6 x 16mm long	2		
217	101450	Plunger bracket	1		
218	101457	Compression spring	1		
219	208104150	Retaining ring	1		
220	101458	Locking plunger	1		
221	307206015	Nut M6	1		
222	337406165	Screw pan head M6 x 16mm long	1		
223	101406	Bracket	1		
224	303204300	Bolt cap head M4 x 30mm long	2		
225	101281	Throttle lever and cable	1		
226	101278	Earth lead cut out	1		
227	101283	Cover — selector rod — gears	1		
228	208107040	Spirol pin M4 x 24mm long	1		
229	302208200	Screw counter sunk socket M8 x 20mm long	1		
230	101483	Operating plate L.H.	1		
231	101463	Compression spring	1		
232	101462	Cable end	1		
233	101282	Cable	2		
234	101284	Cover — PTO rod	1		
235	342406120	Self lock setscrew M6 x 12mm long	1		
236	101279	Operating plate	1		
237	307206015	Nut M6	4		
238	101262	Anchor plate L.H.	1		
239	101261	Anchor plate R.H.	1		
240	101398	Trunnion	2		
241	301412355	Setscrew M12 x 35mm long	2		
242	308120015	Flat washer M12	2		
243	101252	Pivot bar	1		
244	101394	Spacer	2		
245	101395	Spacer tube	1		

Illus. No.	Part Number	Description	No. off	Bulletin	Bin No.
246	101285	Knob	2		
247	101400	Gear lever	1		
248	101399	PTO lever	1		
249	301412205	Setscrew M12 x 20mm long	2		
250	308120015	Flat washer M12 dia.	2		
251	207001820	Handle bar grip	2		
252	101243	Handle bar	1		
253	101288	Lock nut	1		
254	255581121	Locking washer	1		
255	101287	Thrust washer	2		
256	101322	Handle bar extension includes:—	1		
257	202030020	Grease nipple 1/8 BSP	1		
258	307212210	Thread insert	6		
259	342410250	Self lock setscrew M10 x 25mm long	4		
260	101260	Grommet	2		
261	208032030	Rivet 3/32 inch x ·29mm	4		
262	58197	Serial number plate	1		
263	101242	Index boss	1		
264 -279 not allocated					

DRIVE WHEELS

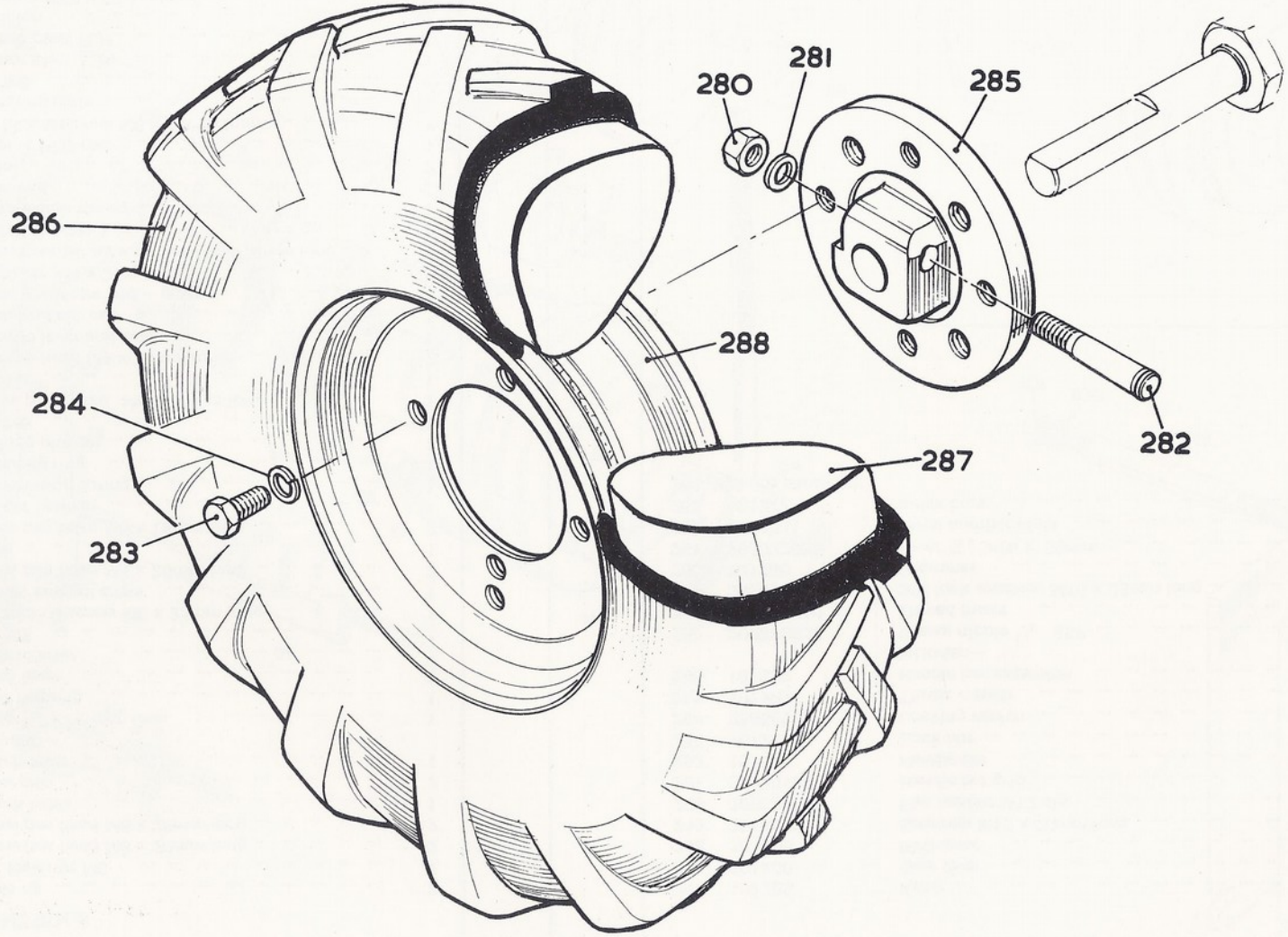

Illus. No.	Part Number	Description	No. off	Bulletin	Bin No.
		DRIVE WHEELS			
280	307210015	Nut M10	2		
281	308100015	Plain washer M10	2		
282	101127	Cotter pin	2		
283	301410205	Setscrew M10 x 20mm long	8		
284	308100045	Spring washer M10 dia.	8		
285	101126	Wheel hub	2		
	101128	Wheel assembly L.H.	1		
	101316	Wheel assembly R.H.	1		
		comprising:–			
286	209058340	Tyre 5.00 x 8 4 ply rating	2		
287	209061240	Tube 5.00 x 8	2		
288	64467	Wheel	2		

Illus. No.	Part Number	Description	No. off	Bulletin	Bin No.

Howard Dragon - Parts List

824		12.79	22

GEARBOX

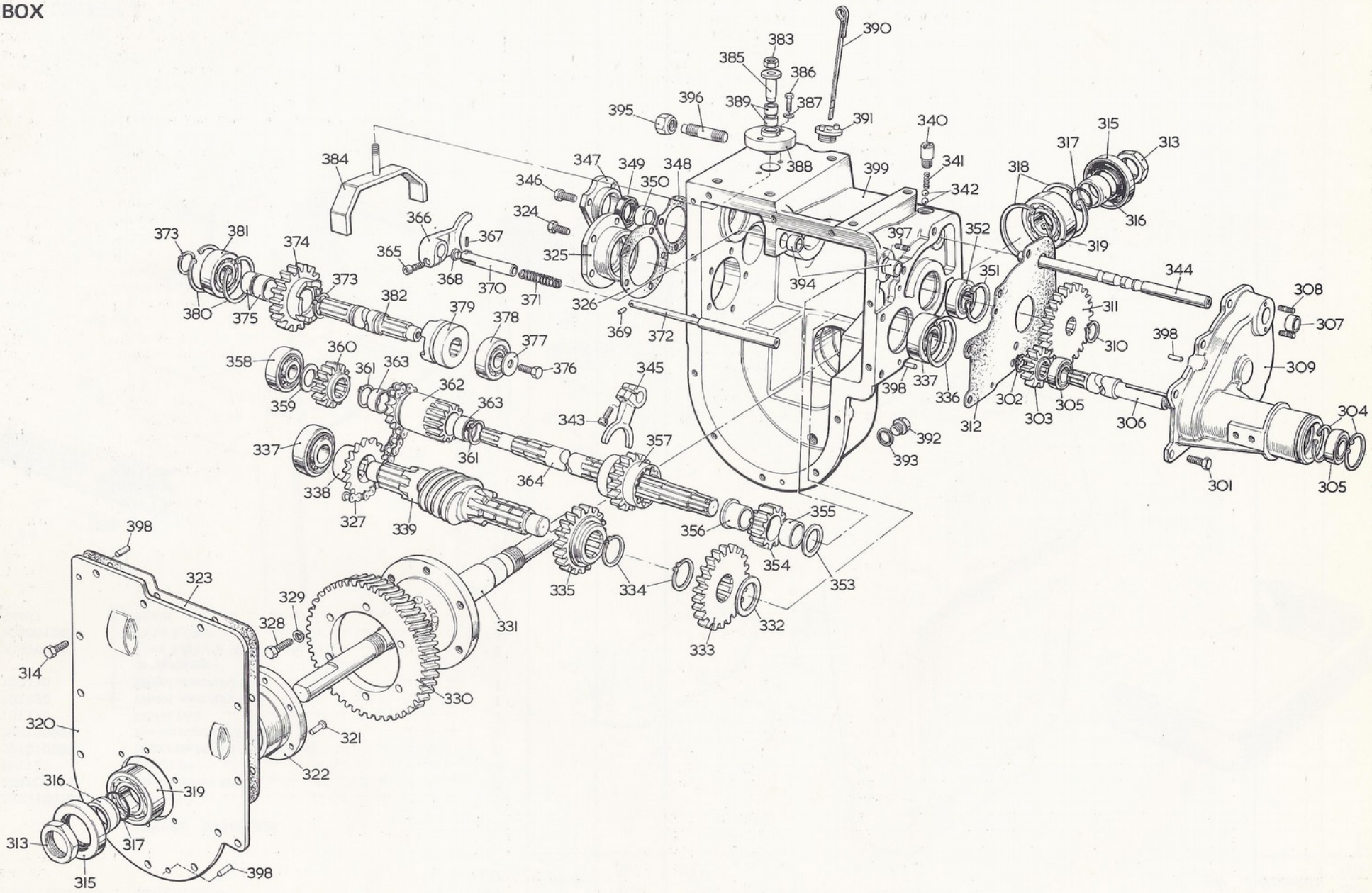

Illus. No.	Part Number	Description	No. off	Bulletin	Bin No.
		GEARBOX			
301	342408200	Self lock setscrew M8 x 20mm	6		
302	208102160	Circlip	1		
303	101508	Pinion	1		
304	208101260	Circlip	2		
305	252042125	Bearing	2		
306	101092	Input shaft	1		
307	251517123	Bush	1		
308	101118	Stud	2		
309	101091	Housing	1		
310	20802160	Circlip	1		
311	101510	Gear	1		
312	101116	Gasket	1		
313	307730025	Nut M30	2		
314	342408200	Screw M8 x 20mm	12		
315	267240121	Oil seal	2		
316	101073	Sleeve	2		
317	202025470	O ring	2		
318	208101410	Circlip	2		
319	253072191	Bearing	2		
320	101094	Cover plate assembly	1		
		includes:–			
321	208023010	Rivet	6		
322	101102	Bearing housing	1		
323	101095	Gasket	1		
324	342408200	Self lock setscrew M8 x 20mm long	5		
325	101085	Bearing cap	1		
326	101082	Gasket ·25mm	As req'd		
	101083	Gasket ·4mm	As req'd		
	101084	Gasket 1·0mm	As req'd		
327	204003230	Chain	1		
328	301408250	Screw M8 x 25mm long	6		
329	308080040	Spring washer M8	6		
330	101070	Worm wheel	1		
331	101058	Axle	1		
332	101089	Thrust washer	1		
333	101505	Spur gear	1		
334	208102260	Circlip	2		
335	101088	Spur gear	1		
336	208001910	Ringclip	1		
337	251022075	Bearing	2		
338	101498	Sprocket 16T	1		
339	101071	Worm shaft	1		
340	101459	Guide plug	1		
341	101460	Compression spring	1		
342	250003701	Ball	2		
343	303206200	Socket head capscrew M6 x 20mm long	1		
344	101515	Selector rod	1		
345	101114	Selector fork	1		
346	342408200	Self lock setscrew M8 x 20mm long	3		
347	101452	Cap	1		
348	101063	Gasket 0.25mm	As req'd		
	101064	Gasket 0.4mm	As req'd		
	101065	Gasket 1·0mm	As req'd		
349	264028071	Oil seal	1		

Illus. No.	Part Number	Description	No. off	Bulletin	Bin. No.
350	101453	Sleeve	1		
351	208001900	Ring clip	1		
352	250920071	Bearing	1		
353	101528	Spacer	1		
354	101525	Gear	1		
		includes:–			
355	252528153	Bush	1		
356	101524	Bush	1		
357	101496	Gear 19T	1		
358	250920071	Bearing	1		
359	101528	Spacer	1		
360	101501	Pinion	1		
361	208002990	Circlip	2		
362	101514	Reverse dog	1		
		includes:–			
363	252528153	Bush	2		
364	101497	Layshaft	1		
365	303206200	Cap screw M6 x 20mm long	1		
366	101516	Selector fork	1		
367	208107050	Roll pin M3 x 14mm long	1		
368	101521	Button	1		
369	208107060	Roll pin M5 x 14mm long	1		
370	101519	Shaft carrier	1		
371	101080	Compression spring	1		
372	101081	Control rod	1		
373	208002990	Circlip	2		
374	101526	Gear	1		
		includes:–			
375	252528153	Bush	1		
376	342408200	Self lock setscrew M8 x 20mm long	1		
377	101157	Special washer	1		
378	252052151	Bearing	1		
379	101512	Sliding dog	1		
380	208001950	Circlip	2		
381	252552195	Bearing	1		
382	101513	PTO shift	1		
383	307208200	Self lock nut M8	1		
384	101523	Interlock lever	1		
385	101379	Spacer	1		
386	301406200	Bolt M6 x 20mm long	2		
387	308060040	Spring washer M6 dia.	2		
388	101518	Bush assembly	1		
		includes:–			
389	251517123	Bush	2		
390	101307	Dipstick	1		
391	101308	Dipstick plug	1		
392	203031230	Flanged plug ¼ inch BSP	1		
393	202042020	Bonded seal ¼ inch BSP	1		
394	251517123	Bush	2		
395	208056630	Nut M12	4		
396	101072	Stud	4		
397	101118	Stud	2		
398	208013500	Dowel 6 x 20mm long	4		
399	101051	Gearbox	1		

Howard Dragon - Parts List

824		12.79	24

ROTOR GEARBOX

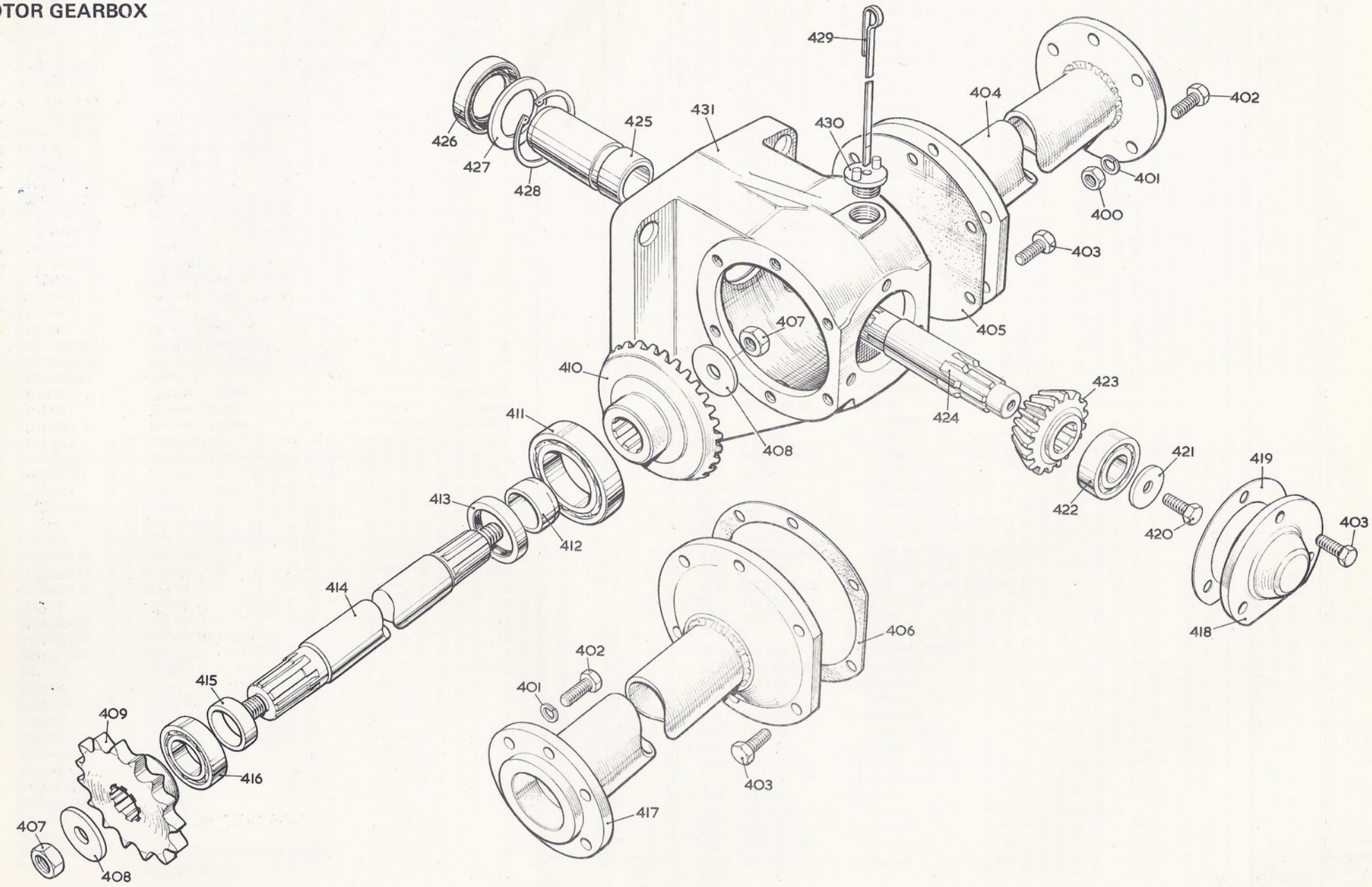

Illus. No.	Part Number	Description	No. off	Bulletin	Bin No.
		ROTOR GEARBOX			
400	307208010	Nut M8	6		
401	308080040	Spring washer 8mm dia.	12		
402	301408200	Setscrew M8 x 20mm long	12		
403	342408200	Self lock setscrew M8 x 20mm long	15		
404	101147	Spacing tube 16 inch	1		
	101203	Spacing tube 24 inch	1		
	101216	Spacing tube 36 inch	1		
405	101148	Gasket	1		
406	101164	Gasket 0·25	As req'd		
	101163	Gasket 0·4	As req'd		
	101162	Gasket 1·0	As req'd		
407	307212200	Self lock nut M12	2		
408	14034	Special washer	2		
409	101144	Sprocket 15T	1		
		Note Sprocket illustration No. 469 can be fitted in this position also			
410	101153	Crown wheel 34T	1		
411	255080161	Bearing	1		
412	101155	Sleeve	1		
413	265235101	Oil seal	1		
414	101152	Jackshaft 16 inch	1		
	101235	Jackshaft 24 inch	1		
	101218	Jackshaft 36 inch	1		
415	101156	Spacer	1		
416	253055131	Ball bearing	1		
417	101151	Jackshaft housing 16 inch	1		
	101234	Jackshaft housing 24 inch	1		
	101217	Jackshaft housing 36 inch	1		
418	101160	Bearing cap	1		
419	101165	Gasket	1		
420	342408200	Self lock setscrew M8 x 20mm long	1		
421	101157	Special washer	1		
422	252047141	Bearing	1		
423	101154	Pinion 18T	1		
424	101161	Pinion shaft	1		
425	101158	Splined sleeve	1		
426	265235101	Oil seal	2		
427	101159	Support ring	1		
428	208101310	Circlip	1		
429	101307	Dipstick	1		
430	101308	Plug	1		
431	101150	Gearbox	1		
432 - 449 not allocated					

Illus. No.	Part Number	Description	No. off	Bulletin	Bin No.

Howard Dragon - Parts List

824		12.79 ·	26

ROTOR SHIELDS

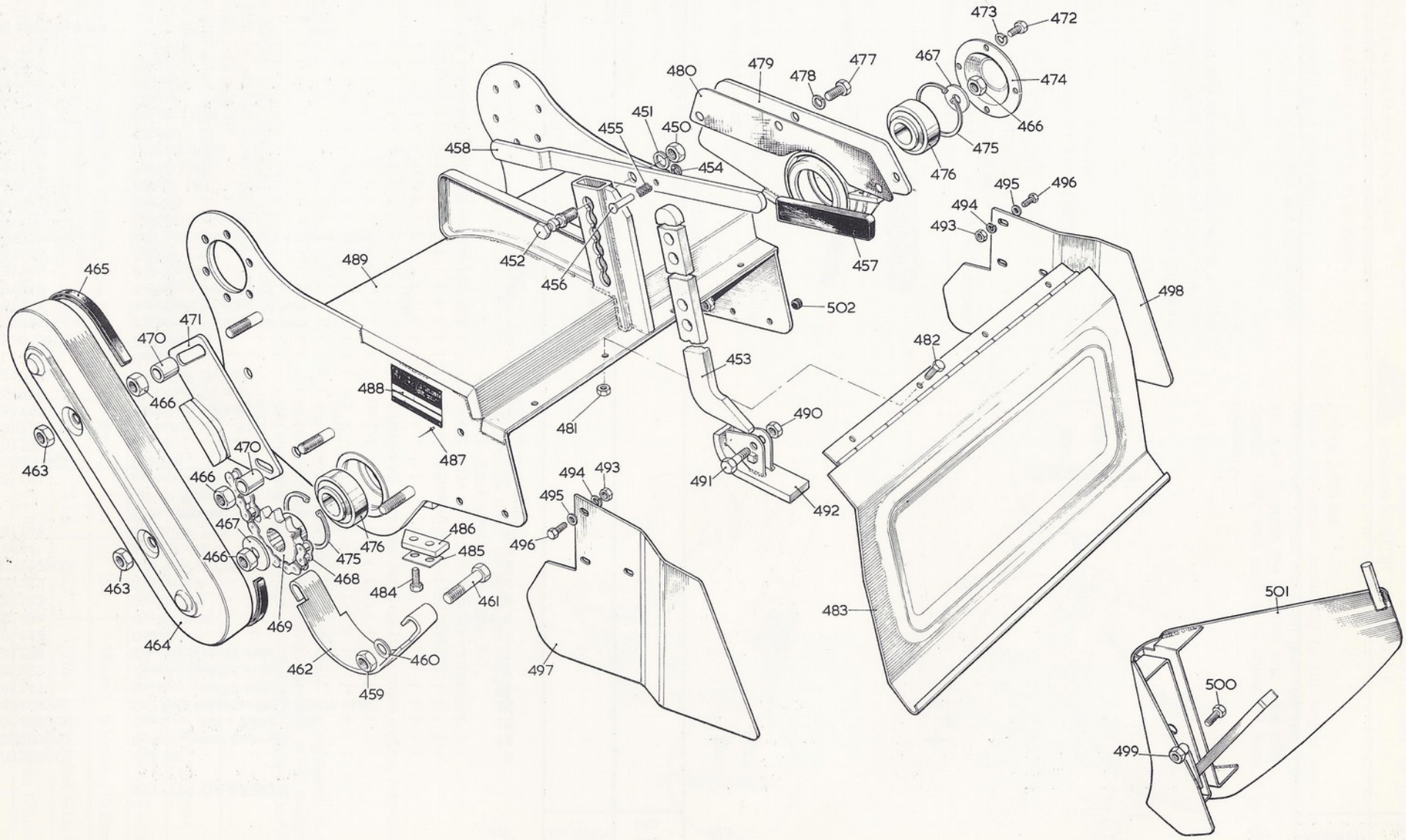

Illus. No.	Part Number	Description	No. off	Bulletin	Bin No.
		ROTOR SHIELDS			
450	307212010	Nut M12	1		
451	308120045	Spring washer M12 dia.	1		
452	101136	Locking pin	1		
453	101138	Depth control skid	1		
	101409	Depth control lever assy comprising:—	1		
454	208059060	Push on fix	1		
455	101407	Compression spring	1		
456	208106015	Rivet countersunk	1		
457	207001660	Handle sleeve	1		
458	101137	Depth control lever	1		
459	307212010	Nut M12	2		
460	308120010	Flat washer 12mm dia.	2		
461	301212450	Bolt M12 x 45mm long	2		
462	101141	Wear shoe	1		
463	307212025	Nut — lock M12	2		
464	101139	Chaincase	1		
465	203038990	Sealing strip	1		
466	307212200	Self lock nut M12	4		
467	14034	Special washer	2		
468	204002500	Drive chain	1		
469	101145	Sprocket 12T note: sprocket illustration No. 409 can also be fitted in this position	1		
470	101142	Spacer	2		
471	101143	Chain tensioner	1		
472	301406105	Setscrew M6 x 10mm long	4		
473	308060045	Spring washer M6 dia.	4		
474	101149	Bearing cover	1		
475	208101410	Circlip	2		
476	253072302	Bearing	2		
477	301412205	Setscrew M12 x 20mm long	3		
478	308120045	Spring washer M12 dia.	3		
479	101133	Side plate — 20 inch and 24 inch	1		
	101444	Side plate — 36 inch	1		
480	101146	Packing strip	As req'd		
			16 inch / 24 inch / 36 inch		
481	307206205	Self lock nut M6	4 / 6 / 8		
482	301406105	Setscrew M6 x 10mm long	4 / 6 / 8		
483	101434	Trailing board 16 inch	1		
	101436	Trailing board 24 inch	1		
	101437	Trailing board 36 inch	1		
484	301408165	Setscrew M8 x 16mm long	4		
485	101442	Locking plate	2		
486	101439	Cutter blade	2		
487	208032020	Rivet $^{3}/_{32}$ inch x ·20mm long	4		
488	58197	Serial number plate	1		

Illus. No.	Part Number	Description	No. off	Bulletin	Bin No.
489	101132	Rotor hood — 16 inch	1		
	101230	Rotor hood — 24 inch	1		
	101212	Rotor hood — 36 inch	1		
490	307212205	Self lock nut M12	1		
491	301412355	Bolt M12 x 35mm long	1		
492	101330	Shoe	1		
	101388	Side shield assembly comprising:—			
493	307206015	Nut M6	6		
494	308060045	Spring washer M6 dia.	6		
495	308060015	Flat washer M6 dia.	6		
496	301406165	Setscrew M6 x 16mm long	6		
497	101386	Side shield L.H.	1		
498	101387	Side shield R.H.	1		
	101381	Furrower assembly comprising:—	1		
499	101351	Clamp nut	1		
500	342408200	Self lock setscrew M8 x 20mm	1		
501	101349	Furrower	1		
502	208044190	Plug	6		
503 - 509 not allocated					

ROTOR ASSEMBLIES

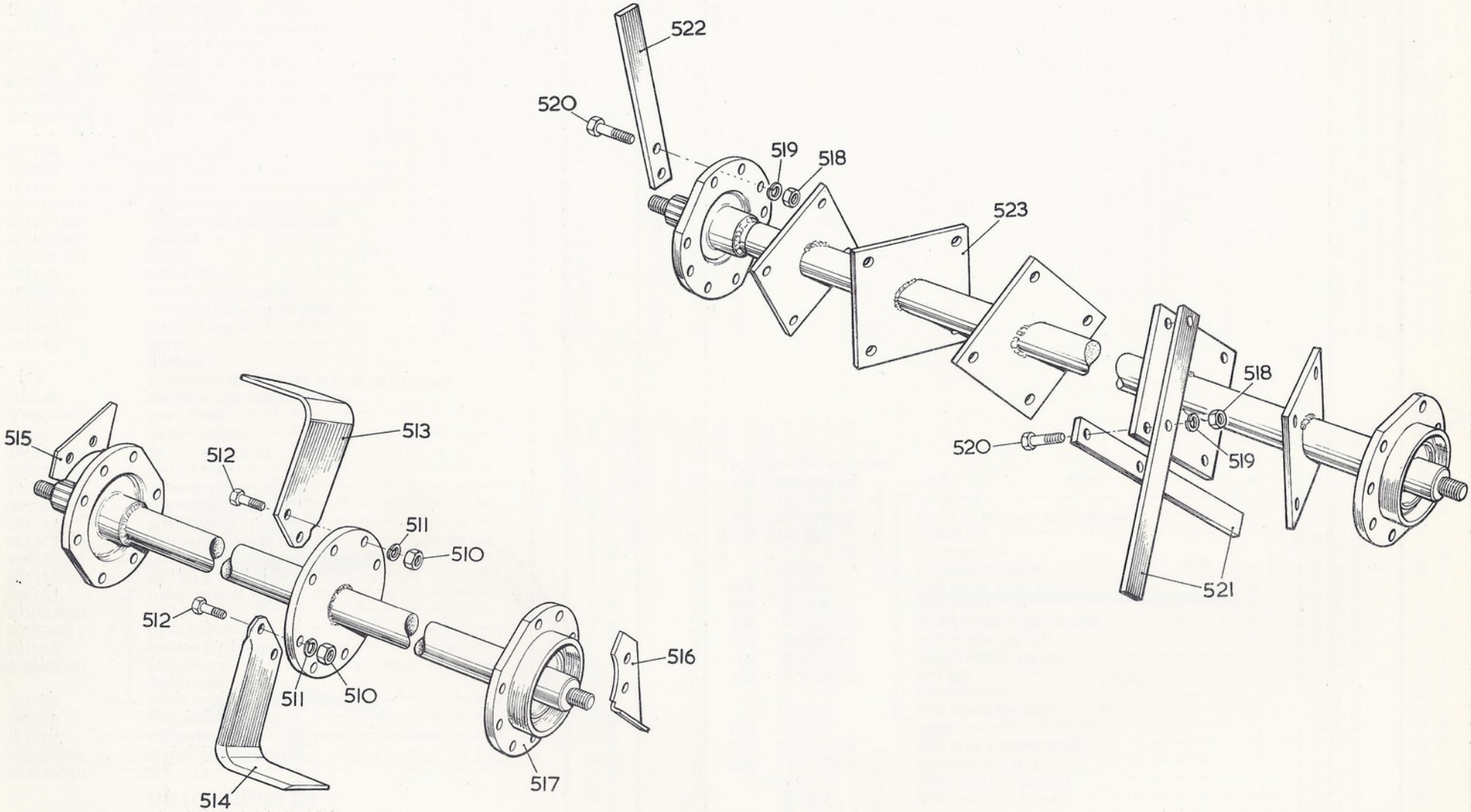

ROTOR ASSEMBLIES

Illus. No.	Part Number	Description	16"	24"	No. off	Bulletin	Bin No.
	710038	Blade bolt assembly ... comprising:—					
510	307510060	Nut M10	20	28			
511	308100040	Spring washer M10	20	28			
512	101318	Special bolt	20	28			
513	9836	Blade L.H.	4	6			
514	9837	Blade R.H.	4	6			
515	101440	Shearing blade L.H.	1	1			
516	101441	Shearing blade R.H.	1	1			
517	101189	Rotor 16 inch	1	—			
	101236	Rotor 24 inch	—	1			
	710039	Tine bolt assembly comprising:—					
518	307210060	Nut M10			32		
519	308100040	Spring washer M10 dia.			32		
520	309410300	Bolt M10 x 30mm long			32		
521	101317	Tine 250mm long			24		
522	101226	Tine 210mm long			4		
523	101220	Rotor 36 inch			1		

Illus. No.	Part Number	Description	No. off	Bulletin	Bin No.

TRANSFERS

543

542

541

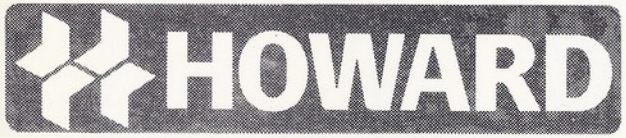

548

547

FOR MAINTENANCE SEE
HANDBOOK PROVIDED
WITH THIS MACHINE

540

WARNING

Beware of rotating blades. See there is no one in direction of driving.

544

VARNING

för roterande bett
Se till att ingen
finns i körriktningen

546

VARO

pyöriviä teriä.
Katso ettei
kukaan ole
ajosuunnassa.

545

Illus. No.	Part Number	Description	No. off	Bulletin	Bin No.
		TRANSFERS			
540	66414	Maintenance	2		
541	101314	Gear and PTO selector	1		
	208041090	Drive screw No 2 x 3/16 inch Type 4	4		
542	101533	Howard	1		
543	101534	Dragon	2		
544	27409	Warning – English	1		
545	27410	Warning – Finnish	1		
546	27411	Warning – Swedish	1		
547	58194	Royal Coat of Arms and Queens Award	1		
548	58249	Howard	1		

Illus. No.	Part Number	Description	No. off	Bulletin	Bin No.

Howard Dragon Numerical Index

Part No.	Illus. or Item No	Bin No.	Part No.	Illus. or Item No	Bin No.	Part No.	Illus. or Item No	Bin No.	Part No.	Illus. or Item No	Bin No.	Part No.	Illus. or Item No	Bin No.	Part No.	Illus. or Item No	Bin No.
607	126		101081	372		101163	406		101379	385		101487	178		203031230	392	
9836	513		101082	326		101164	406		101384	91		101488	179		203034150	168	
9837	514		101083	326		101165	419		101385	92		101489	184		203038990	465	
14034	408		101084	326		101189	517		101386	497		101490	182		203231090	157	
14034	467		101085	325		101203	404		101387	498		101491	183		204002500	468	
27409	544		101088	335		101212	489		101388	493		101493	185		204003230	327	
27410	545		101089	332		101216	404		101394	244		101495	180		204023180	67	
27411	546		101091	309		101217	417		101394	245		101496	357		204023190	67	
58194	547		101092	306		101218	414		101398	240		101497	364		204050310	51	
58197	262		101094	320		101220	523		101399	248		101498	338		207001660	457	
58197	488		101095	323		101226	522		101400	247		101501	360		207001820	251	
58249	548		101102	322		101230	489		101404	74		101505	333		207027180	200	
64467	288		101114	345		101234	417		101406	223		101507	36		208001900	351	
66414	540		101116	312		101235	414		101407	455		101508	303		208001910	336	
101005	68		101118	308		101236	517		101409	454		101509	58		208001950	380	
101006	120		101118	397		101242	263		101413	81		101510	311		208002990	361	
101007	59		101121	14		101243	252		101414	82		101512	379		208002990	373	
101008	66		101123	32		101246	215		101415	80		101513	382		208013500	398	
101009	60		101126	285		101252	243		101420	98		101514	362		208021655	207	
101010	65		101127	282		101256	210		101422	22		101515	344		208023010	321	
101011	56		101128	285		101257	205		101423	25		101516	366		208032020	487	
101013	95		101132	489		101260	260		101434	483		101518	388		208032030	261	
101014	79		101133	479		101261	239		101436	483		101519	370		208040275	7	
101016	55		101136	452		101262	238		101437	483		101521	368		208044190	502	
101018	63		101137	458		101278	226		101439	486		101523	384		208051630	122	
101019	64		101138	453		101279	236		101440	515		101524	356		208056630	395	
101020	78		101139	464		101280	204		101441	516		101525	354		208059060	454	
101021	72		101141	462		101281	225		101442	485		101526	374		208062090	26	
101022	70		101142	470		101282	233		101444	479		101528	353		208062100	6	
101024	124		101143	471		101283	227		101449	213		101528	359		208101260	304	
101023	76		101144	471		101284	234		101450	217		101531	18		208101260	310	
101025	127		101145	469		101285	246		101452	347		101532	99		208101310	428	
101026	121		101146	480		101287	255		101453	350		101533	542		208101410	318	
101033	55		101147	404		101288	253		101454	31		101534	543		208101410	475	
101035	173		101148	405		101298	156		101455	8		101536	33		208102160	302	
101036	166		101149	474		101299	174		101457	218		101537	96		208102260	334	
101037	167		101150	431		101307	390		101458	220		710038	510		208102400	68	
101038	169		101151	417		101307	429		101459	340		710039	518		208104150	219	
101045	186		101152	414		101308	391		101460	341		101406045	34		208106015	456	
101048	77		101153	410		101308	430		101462	232		103408070	181		208107040	228	
101051	399		101154	423		101314	541		101463	231		107208200	170		208107050	367	
101058	331		101155	412		101316	285		101466	209		108030540	171		208107060	369	
101063	348		101156	415		101317	521		101467	206		108050940	155		209058340	286	
101064	348		101157	377		101318	512		101468	208		108061125	35		209061240	287	
101065	348		101157	421		101322	256		101478	89		133408040	172		250003701	342	
101070	330		101158	425		101330	492		101479	90		147405060	154		250920071	352	
101071	339		101159	427		101349	501		101480	2		202025470	317		250920071	358	
101072	396		101160	418		101351	499		101481	29		202030020	257		251022075	337	
101073	316		101161	424		101353	73		101482	30		202042020	393		251228081	71	
101080	371		101162	406		101362	5		101483	230		203025255	28		251517123	307	

Howard Dragon Numerical Index

824		12.79	34

Part No.	Illus. or Item No.	Bin No.	Part No.	Illus. or Item No	Bin No.	Part No.	Illus. or Item No	Bin No.	Part No.	Illus. or Item No	Bin No.	Part No.	Illus. or Item No	Bin. No.	Part No.	Illus. or Item No	Bin No.
251517123	394		301212450	461		303206200	365		307212010	459		308080015	84		337404165	24	
251517123	389		301212700	75		307204055	3		307212015	101		308080040	85		337404165	216	
252042125	305		301306405	177		307204055	23		307212025	463		308080045	20		337406165	222	
252047141	422		301406105	472		307206015	15		307212210	258		308100010	94		337406205	202	
252052151	378		301406105	485		307206015	211		307212200	407		308100015	281		337406255	214	
252528153	355		301406125	17		307206015	221		307212200	466		308100040	401		337406355	203	
252528153	363		301406165	496		307206015	237		307212205	96		308100040	511		337408165	21	
252528153	375		301406200	386		307206015	493		307212205	490		308100040	519		342406120	235	
252552195	381		301406200	11		307206050	9		307306055	175		308100045	284		342408200	88	
253072191	319		301408165	484		307206205	1		307406095	165		308120010	460		342408200	301	
253072302	476		301408200	86		307206205	27		307510060	510		308120015	97		342408200	314	
253539201	125		301408200	402		307206205	481		307730025	313		308120015	242		342408200	324	
255080161	411		301408250	87		307208010	400		308060010	10		308120015	200		342408200	346	
255578011	123		301408250	328		307208015	19		308060015	176		308120045	100		342408200	376	
255581121	254		301410205	283		307208200	52		308060015	495		308120045	451		342408200	403	
264028071	394		301412205	249		307208200	83		308060040	329		308120045	478		342408200	420	
265235101	413		301412205	477		307208200	383		308060040	387		309410300	520		342408200	500	
265235101	426		301412355	241		307210015	280		308060045	16		313206120	57		342410250	93	
267240121	315		302208200	229		307210060	518		308060045	473		320206010	201		342410250	259	
301208600	53		303204300	224		307212010	69		308060045	494		325406015	211		342410305	153	
301212355	491		303206200	343		307212010	450		308080015	54		337404165	1				

HOWARD

Howard Rotavator Co. Ltd.
A member of the Howard group

Saxham Bury St Edmunds
Suffolk IP28 6RP England
Telephone Bury St Edmunds (0284) 632
Telex 817321

Printed in England

Part Number 209005108