Manor 35 Manor 55R Cultivator Tiller Rotavator

Manual – Operating & Maintenance Instructions

This is a free download from
www.allotment-garden.org

MANOR 35 – MANOR 55R YR 2006

NOTICE D'UTILISATION ET D'ENTRETIEN

OPERATING AND MAINTENANCE INSTRUCTIONS
BETRIEBS UND WARTUNGSANLEITUNG
ISTRUZIONI PER L'USO E LA MANUTENZIONE

CERTIFICAT DE GARANTIE
WARRANTY - GARANTIE - GARANZIA

SIGNATURE ET CACHET DU VENDEUR
STAMP - STEMPEL - TIMBRO

DATE / DATE / TAG / DATA :

NO CROP PROTECTORS
OR EXTENSION TINES
ON MANOR 35

CE

F	GB	D	I

MOTOBINEUSE • TILLER • MOTORHACKE • MOTOZAPPA

PILOTE 88 SAS 11, rue Jules Ferry - BP 185 - 88207 REMIREMONT CEDEX - France -
☎ (33) 03.29.23.36.64 - Fax. (33) 03.29.23.24.25 - E-mail : pilote88@wanadoo.fr

CARACTERISTIQUES TECHNIQUES

	BRIGGS & STRATTON		HONDA	TECUMSEH
Moteur	Monocylindre 4 Temps			
Modèle	91212	110492	GC 160	Geo-Tec 50
Cylindrée	127 cc	190 cc - OHV	160 cc	195 cc
Puissance	3,5 cv à 3600 Trs/mn	5,5 cv à 3600 Trs/mn	5 cv à 3600 Trs/mn	5 cv à 3600 Trs/mn
Capacité huile	0,6 L	0,6 L	0,6 L	0,6 L
Essence	1,9 L	2,8 L	2,8 L	3 L
Bougie	CHAMPION CJ 8 ou équivalent	CHAMPION QC12YC ou équivalent	NGK BPR 6 ES ou équivalent	CHAMPION RJ19LM ou équivalent
Lubrifiant	Huile moteur SAE 15 W 40			
Carburant	Super sans plomb indice d'octane 98			

Niveau sonore mesuré depuis le poste de travail, pour chaque modèle : Lp ≤ 95 dB(A).
Mesure de vibrations aux poignées de manchons, selon EN 1033.1 : < 5,5 m/s²

Transmission :
- Par courroie trapézoïdale avec embrayage
- Par galet tendeur
- Réducteur à chaîne et roulements à billes étanches.

Vitesse de rotation des outils 120 Trs/mn
Mancheron : réglable en hauteur et en déport (option)
Poids : environ 46 kg

AVANT DE METTRE VOTRE MACHINE EN MARCHE, VEUILLEZ LIRE ATTENTIVEMENT LA NOTICE DU MOTEUR AINSI QUE LES INSTRUCTIONS DE CE MANUEL.

Dans le but d'améliorer ses produits et d'être en conformité avec les normes européennes, PILOTE 88 se réserve le droit de modifier sans préavis les caractéristiques.

TECHNICAL SPECIFICATIONS

Engine	BRIGGS & STRATTON		HONDA	TECUMSEH
Type	All single cylinder 4 stroke engines			
Model	91212	110492	GC 160	Geo-Tec 50
Capacity	127 cc	190 cc - OHV	160 cc	195 cc
H.P.	3,5 / 3600 RPM	5,5 / 3600 RPM	5 / 3600 RPM	5 / 3600 RPM
Oil capacity	0,6 L	0,6 L	0,6 L	0,6 L
Fuel Capacity	1,9 L	2,8 L	2,8 L	3 L
Spark Plug type	Champion CJ8 or equivalent	Champion QC12YC or equivalent	NGK BPR 6 ES or equivalent	CHAMPION RJ19LM or equivalent
Engine oil	SAE 15 W 40			
Fuel	Lead-free 98 octane			

Sound level measured at operators position : Lp ≤ 96 dB(A).
Handle vibrations, EN 1033.1 : < 5,5 m/s²

TRANSMISSION :
- *Vee-belt and clutch type belt tensioner*
- *Chain driven speed reductor with sealed ball-bearings.*

Rotation speed of cultivating tools : 120 RPM.
Handlebars are adjustable in height and orientation (on option)
Weignt, approximately : 46 kilos.

WARNING : Before starting your cultivator, read the motor instruction manual carefully as well as the present manual.

In an effort to improve its products and comply with european norms, PILOT 88 resrves the right to modify certain characteristics without prior notice.

TECHNISCHE DATEN

		BRIGGS & STRATTON		HONDA	TECUMSEH
MOTOR		Einzylinder 4 Takt			
MODELL		91212	110492	GC 160	Geo-Tec 50
HUBRAUM		127 ccm	190 ccm - OHV	160 ccm	195 cc
LEISTUNG		3,5 PS bei 3.600 min⁻¹	5,5 PS bei 3.600 min⁻¹	5 PS bei 3.600 min⁻¹	5 PS bei 3600 min⁻¹
INHALT	Öl	0,6 Liter	0,6 Liter	0,6 Liter	0,6 Liter
	Benzin	1,9 Liter	2,8 Liter	2,8 Liter	3 Liter
ZUNDKERZEN		CHAMPION CJ 8 oder entsprechend	CHAMPION QC12YC oder entsprechend	NGK BPR 6 ES oder entsprechend	CHAMPION RJ19LM oder entsprechend
MOTORENÖL		MOTORENOL SAE 15 W 40			
KRAFTSTOFF		Bleifreies Benzin Oktanzahl 98			

GERÄUSCHPEGEL am Arbeitsplatz gemessen : für jedes Modell Lp ≤ 95 dB (A) im Leerlauf.

Holm vibration nach, EN 1033.1 : < 5,5 m/s²

ÜBERSETZUNG :
- *Durch Keilriemen mit Spannrollenkupplung*
- *Kettenuntersetzungsgetriebe mit dichtem Kugellager.*

DREHGESCHWINDIGKEIT der Werkzeuge : 120 min⁻¹
STERZ Höheneinstellbar und, auf Wahl, seitliche Einsteilung.
GEWICHT ungefähr 46 kg.

ACHTUNG : BEVOR SIE DIE MASCHINE IN BETRIEB NEHMEN, BITTE AUFMERKSAM DIE MOTORANLEITUNG SOWIE DIE ANGABEN DIESER ANLEITUNGEN DURCHLESEN.

Um ihr Produkt zu verbessen und mit den Europäischen Normen übereinzustimmen behält sich die Firma PILOTE 88 das Recht vor die Eigenschaften der Maschinen ohne Vorankündigung zu ändern.

CARATTERISTICHE TECHICHE

		BRIGGS & STRATTON		TECUMSEH
MOTORE		Monocilindrico 4 T		
MODELLO		91212	110492	Geo-Tec 50
CILINDRATA		127 cc	190 cc - OHV	195 cc
POTENZA		3,5 CV a 3600 G/min	5,5 CV a 3600 G/min	5 CV a 3600 G/min
CAPACITA	Olio	0,6 l	0,6 l	0,6 l
	Benzina	1,9 l	2,8 l	3 l
CANDELLA		CHAMPION CJ8 o equivalente	CHAMPION QC12YC o equivalente	CHAMPION RJ19LM o equivalente
LUBRIFICANTE		Olio motore SAE 15 W 40		
CARBURANTE		Benzina senza piombo 98 ottani		

Livello sonore : Lp ≤ 95 dB(A)

Misura di vibrazioni al manubrio secondo norma 1033.1 : < 5,5 m/s²

TRANSMISSIONE :
A MEZZO CINGHIA TRAPEZOIDALE CON FRIZIONE A MEZZO RULLO
TENDITORE-RIDUTTORE A CATENA E CUSCINETTI A FERA A TENUTA STAGNA

VELOCITA : DI ROTAZIONE DELLE FRESE 120 G/MIN.
MANICO : REGOLABILE IN ALTEZZA E LATERALMENTE.
PESO : 46 KG. CIRCA.

PRIMA DI METTERE IN MOTOR LA MACCHINNA VI PREGHIAMO DI LEGGERE ATTENTAMENTE IL LIBRETTO ISTRUZIONI DEL MOTORE E LE ISTRUZIONI CONTENUTE IN QUESTO MANUALE.

Con l'intento di migiorare i suoi prodotti, e di essere in conformita con le norme Europee, PILOTE 88 si riserva il dirrto di modificarli i senza preavviso.

MONTAGE DU MANCHERON

1) Relever le guidon.

2) Visser l'écrou de blocage. Le mancheron est bloqué latéralement et en hauteur.

3) Dérouler la timonerie d'accélérateur et bloquer la commande à l'aide du boulon M 6 x 45 sur le côté droit du mancheron.

NOTE : La commande d'accélération est réglée en usine.

4) Accrocher les timoneries d'embrayage sur la ou les poignée(s). Poignée gauche : marche arrière. Poignée droite : marche avant.

5) Accrocher les colliers de gaine.

6) Monter le tableau de bord.

7) Emboîter la poignée en Té sur la commande d'accélération.

HANDLEBAR ASSEMBLY

1) Move the handlebar.

2) Screw down and tighten the lateral and height adjustment with nut. The handlebar is now in the locked position.

3) Unwind the throttle cable and fit the throttle lever to the right land handlebar with the hex. bolt M 6 x 45 mm.

***NOTE :** The throttle control is pre-set at the factory.*

4) Fit the clutch controls to the (their) bracket(s) :
Left lever : reverse.
Right lever : forward.

5) Fit the cable-clips to the handlebars.

6) Fit the control panel.

7) Slot the T-Shaped handle on to the accelerator control.

AUFBAU DES STERZES

1) Bewegen sie des sterzes solange auf.

2) Die Sicheurungsmutter festchrauben des Sterz ist nun seitlich und in Höhe blockiert.

3) Das Gashebelgestänge abrollen und die Steuerung mit der Durchsteckschraube M 6 x 45 rechts am Sterz blockieren.

***BEMERKUNG :** Der Gashebel würde im Werk eingestellt.*

4) Die Kupplungsgestänge am Griff (an den Griffen) befestigen. Linker Griff : Ruckwärtsgang. Rechter Griff : Vorwärtsgang.

5) Die Klemmschellen befestigen.

6) Das armaturenbrett zusammenbauen.

7) Den T-Griff and die Geschleunigungssteuerung anpassen.

MONTAGGIO DEL MANICO

1) Alzare il manico.

2) Avvitare il dado di bloccaggio. Il manico e' bloccat lateralmente e all altezza.

3) Volgere il filo dell' acceleratore e bloccare il commando con l'aiuto di un bullone M 6 x 45 sul lato dx del manico.

***NOTA :** Il commando dell' acceleratore e' regolato in azienda.*

4) Fissare filo dell frizious.

5) Fissare i fermacavi.

6) Montar e il quadro di borda.

7) Calzare la manopola a forma di T sul comando di accelerazione.

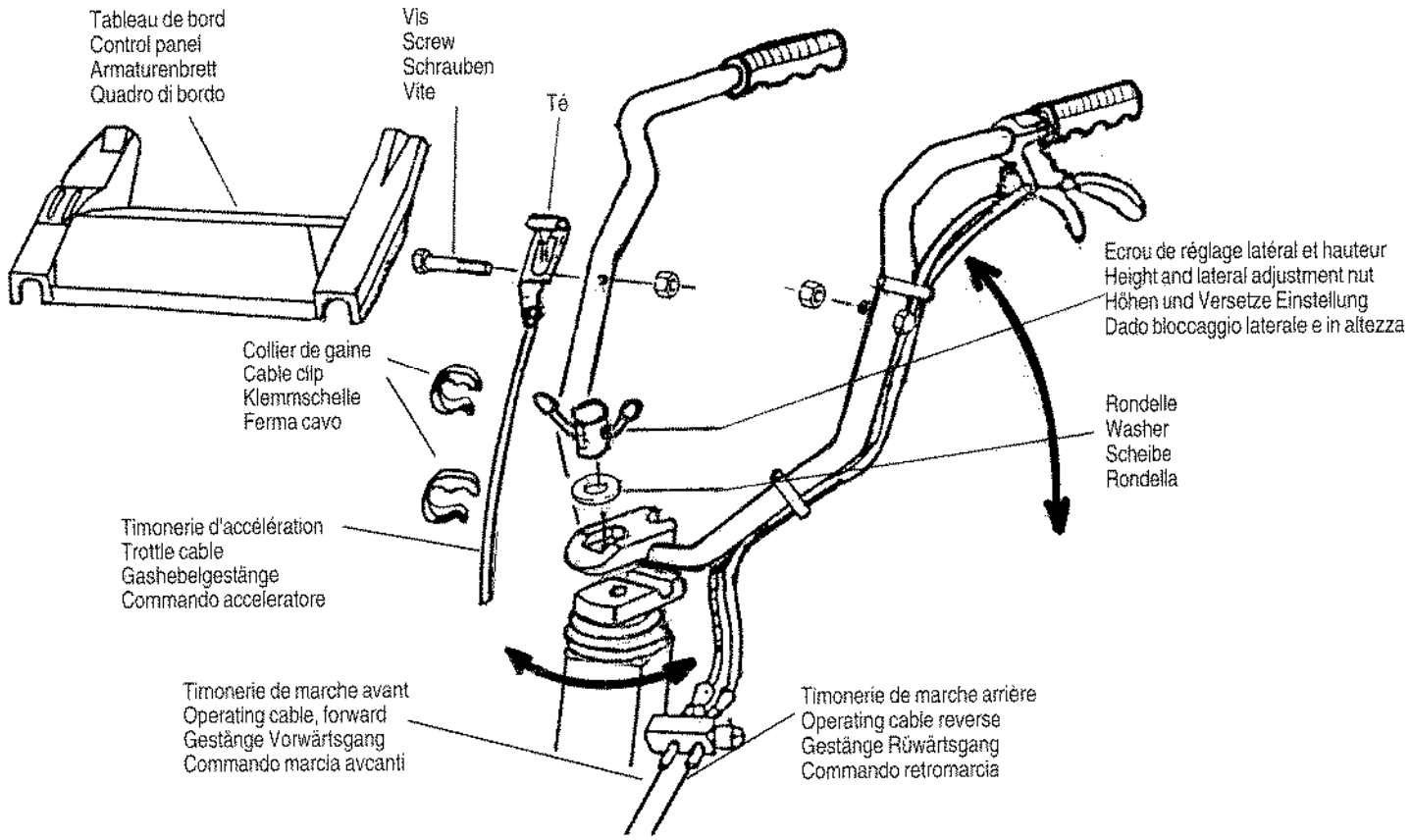

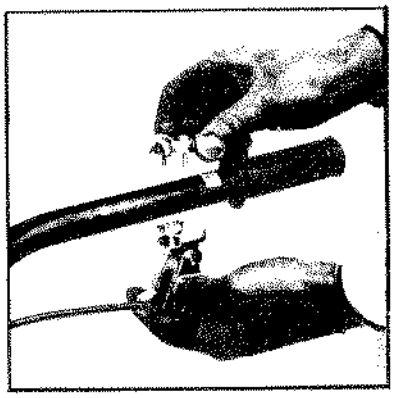

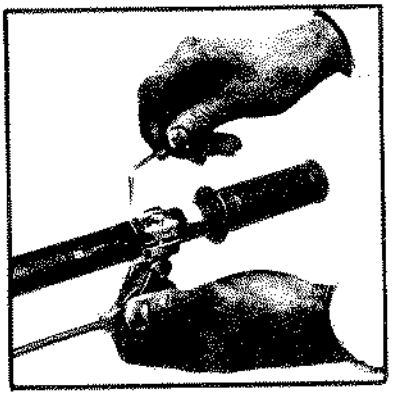

Montage du levier d'embrayage
Drive clutch lever assemby
Aufbau des antriebshebels
Montaggio del leva di comando
Instalacion de la palanca del embrague
Montagem da alavanca
Montage van de koppelingshendel

OUTILS DE TRAVAIL DISQUES PROTÈGE-PLANTES

Votre machine est équipée de couronnes doubles ø 300 mm qui permettent d'obtenir une largeur de travail de 0,54 m.

En ajoutant les deux extensions (couronnes simples), on obtient 0,76 m.

Les disques protège-plantes permettent de travailler à proximité de plantations, massifs, bordures, etc... sans les abîmer.

ROTARY TOOLS & PLANT PROTECTOR DISCS

Your cultivator is equiped with two 12 inch wide double hoes, this provides a total tilling width of 22 inches.
When two extra hoes are fitted, one on each side, a tilling width of 30 inches can be obtained.

The plant protector discs allow you to work close to plants, borders, and so on without damaging them.

WERKZEUGE SCHUTZSCHEIBE FÜR DIE PFLANZEN

Ihre Maschine ist mit Doppelkränzen, Durchmesser 300 mm, ausgestattet. Diese erlauben, eine Arbeitsbreite von 0,54 m zu erhalten.

Wenn Sie die beiden Erweiterungen (einfache Kränze) anbringen, erhalten Sie eine Arbeitsbreite von 0,76 m.

Die Schutzscheiben für die Pfanzen (einfache Kränze) erlauben, neben Bepflanzungen, Beeträndern, usw. zu arbeiten, ohne diese zu beschädigen.

GRUPPI FRESE DISCHI OI PROTEZIONE

La vostra machina e' dotata di 4 grupp fresanti aventi il diametro di 300 mm che permettono una larghezza di lavorc di 0,54 mt.

Aggiungendo le due estensioni (gruppi semplici) si ottiene una larghezza di 0,76 mt.

I dischi oi protezione permettono di lavorare il prossimita' di piantagioni (filari) cespugli. Bordure ecc. senza rovinarli.

Disque Protège-Plantes

Plant Protectors discs
Schutzscheibe für Pfanzen
Dischi di protezione

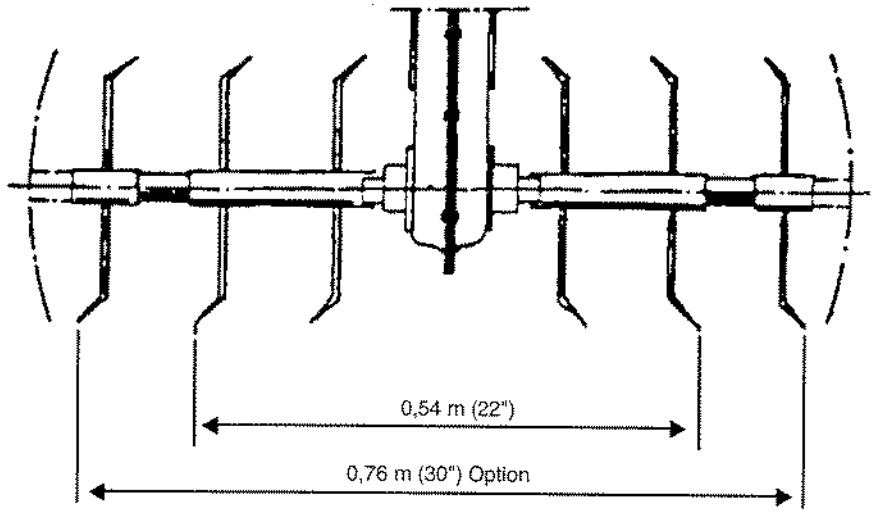

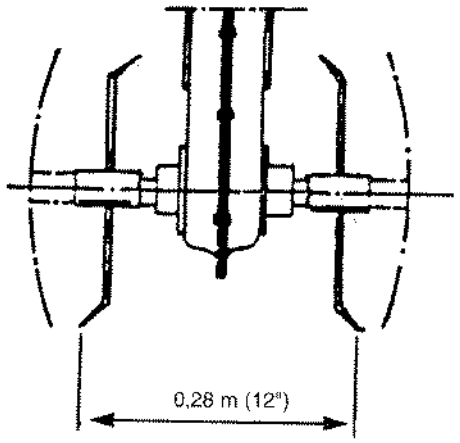

OPTION :
Couronnes de jardinier Réf. 18394

OPTION :
Gardener's wheel Ref. 18394

Wahlzubehör :
Gärtnerkranz Bezugsnr 18394

Au montage des couronnes, veillez à ce que le biseau des outils soit dans le sens de la marche, vers l'avant.

When fitting the cultivating wheels, check that the cutting edges are placed in the correct sense of rotation. See diagram.

Beim Montieren der Kränze bitte aufpassen, daß der Beitel (Abschrägung) der Werkzeuge in Laufrichtung, nach vorne, montiert wird.

Al momento di montare I gruppi frese, fare attenzione che I taglienti delle frese siano nel senso deilla marcia.

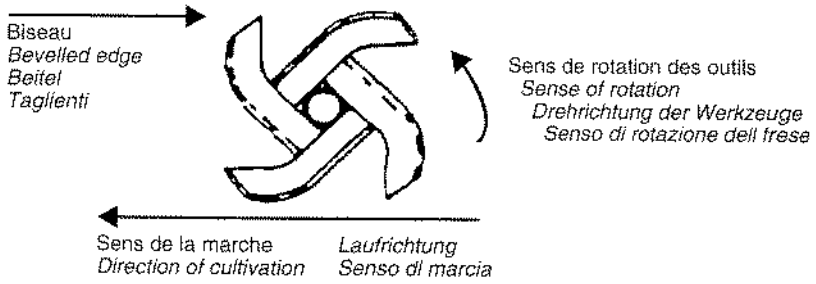

ATTENTION : La motobineuse n'est pas adaptée en travail sur terrain recouvert de gazon compact, sur terrain difficile, cailloux, sol dur, etc...

ATTENTION : *The motor-hoe is unsuitable for working in soils covered by thick grass, on difficult grund, stony, hard, etc...*

ACHTUNG : *Gerät eignet sich nicht zum Umarbeiten von Böden mit einer festen Grasnarbe, auf schwierigem Gelände, kiesigem, steinigem, harten Boden, usw...*

ROUES DE TRANSPORT BEQUILLE DE TERRAGE

CARRIER WHEELS GUIDE LEG

TRANSPORTRÄDER-TIEFENEINSTELLER

Selon version - According to model - Nach Modell

AVEC ROUE AVANT
WITH FRONT WHEEL
MIT VORNERRAD

Position "Transport"
Carrying position
Transporstellung

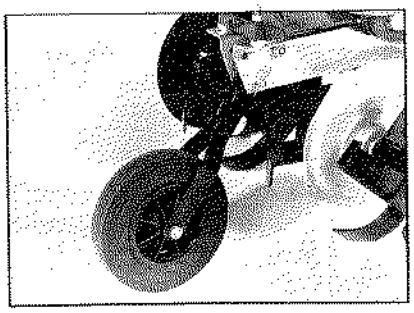

Position "Travail"
Working position
Arbeitsstellung

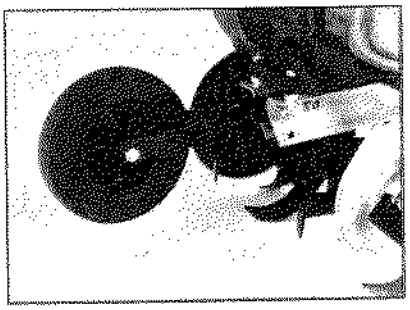

Béquille réglable
Adjustable leg
Einstellbare Stütze

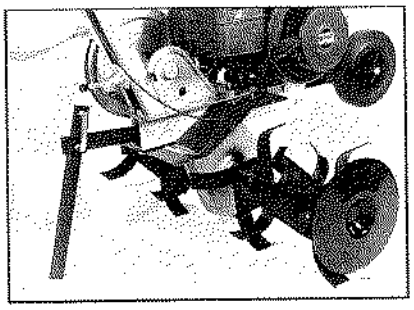

Béquille fixe
Fixed leg
Feste Stüze

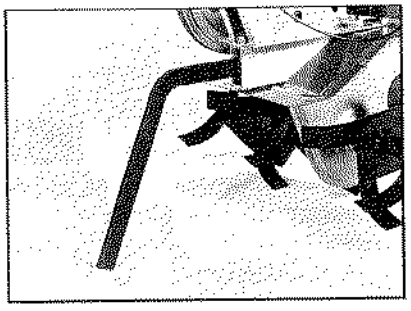

AVEC ROUES ARRIERES - BEQUILLE REGLABLE : ROUES ESCAMOTABLES

WITH REAR CARRIER WHEELS - ADJUSTABLE LEG / RETRACTABLE WHEELS

MIT HINTERRÄDERN - EINSTELLBARE STÜZE / EINZIEHBARE RÄDER

CON RUOTE POSTERIORI PUNTONE REGOLABILE / RUOTE SPORGENTI

Position "Transport"
Carrying position
Transporstellung
Posizione di trasporto

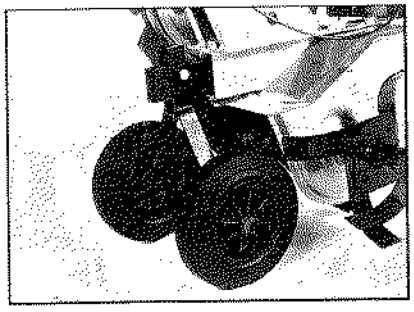

Position "Travail"
Working position
Arbeitstellung
Posizione lavoro

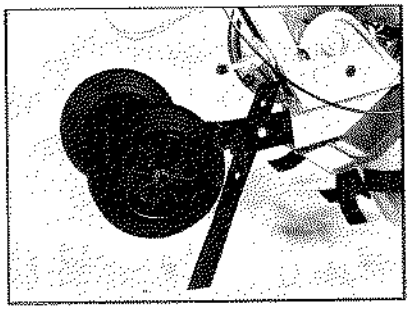

● **Les roues de transport, avant ou arrière, se relèvent ou s'escamotent très facilement avant ou pendant le travail grâce aux goupilles de verrouillage.**

Outre le déplacement de la machine, ces roues à bandage caoutchouc ø 200 facilitent les manœuvres en bout de planche.

RÉGLAGE DE LA BÉQUILLE DE TERRAGE
La profondeur de terre travaillée est fonction du réglage de profondeur de la béquille.
=> Plus la béquille est réglée basse, plus la machine travaille en profondeur.

NOTE : La vitesse de progression de la machine est fonction de l'appui plus ou moins important sur le mancheron. Pour freiner, on appuie sur le mancheron et inversement.

● *The wheels rest freely on the soil.*
The front or rear carrier wheels

DRAG-LEG ADJUSTMENT :
The depth at which you wish to cultivate depends on the adjustment of the leg, the deeper the leg is adjusted, the deeper will be the depth of tilling.

NOTE : *The forward speed of the cultivator depends on the downwards pressure given on the handlebars, to slow the cultivator, apply a strong downwards pressure and vice-versa.*

● *Die Transporträder vorne oder hinten, werden mit Hilfe der Sperrsplinte sehr einfach vor oder während der Arbeit hochgenommen oder eingezogen.*

Diese Räder mit Gummireifen (Durchmesser 200) erleichtern nicht nur den Platzwechsel sondern auch das Wenden am Beetende.

EINSTELLUNG DER TIEFENEINSTELLVORRICHTUNG
Die Arbeitstiefe hängt von der Einstellung der Tiefeneinstellvorrichtung ab.
=> Je tiefer diese Stütze eingestellt ist desto tiefer arbeitet die Motorhacke.

BEMERKUNG : *Die Vorwärtsganggeschwindigkeit der Maschine hängt davon ab. wie Stark Sie auf die Griffe drücken. Zum Bremsen drückt man stark darauf um schneller zu arbeiten, drückt man nur leicht darauf.*

● *Durante l'utilizzo su terreno difficile, sassoso o terreno duro, tenere impugnata saldamente la macchina ed appoggiarsi al manico per frenarne l'avanzamento.*

Le ruote di transporto basculanti, si sollevano molto facilmente. Prima di iniziare il lavoro o durante lo stesso, grazie ai perni di fulcraggio.

Queste ruote del diametro di 200 mm con rivestimento in gomma per il trasporto della macchina. Facilitano inoltre il lavoro in prossimita delle aiuole.

REGOLAZIONE DEL PUNTONE

La profondita del terreno lavorato e' in funzione della regolazione di profondita del puntone.
Piu il puntone e' regolato basso, piu la macchina lavora in profondita.

NOTA : *La velocita di avanzamento si ottiene in funzione della pressione esercitata sul manico. Per frenare appoggiarsi al manico e vice-versa.*

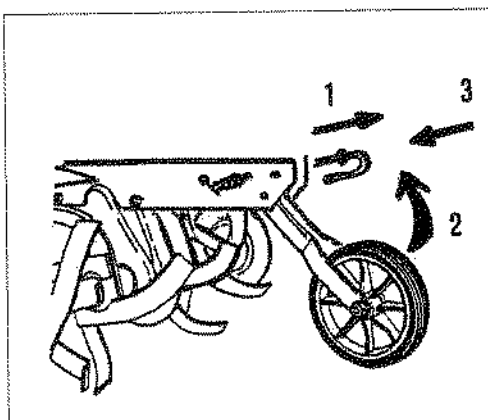

RELEVER LA ROUE DE TRANSPORT POUR LE TRAVAIL

RAISE THE TRANSPORT WHEEL WHEN WORKING.

ZUM ARBEITEN, DAS TRANSPORTRAD HEBEN.

ALZARE LA RUOTA DI TRASPORTO PER IL LAVORO.

INSTRUCTIONS DE BON FONCTIONNEMENT

⚠ Avant toute intervention sur la machine, le moteur doit être arrêté, le fil de bougie déconnecté. Ne jamais mettre de carburant dans le moteur brûlant, attendre son refroidissement, utiliser un entonnoir ou autre pour éviter les éclaboussures.

PRÉPARATION :
(se reporter à la notice du moteur)

- Le moteur est livré sans huile. Il convient de mettre une huile détergente de bonne qualité et de type 15 W 40. A l'aide d'un tournevis, retirer le bouchon, remplir jusqu'à débordement en versant lentement. Contenance 0,6 litres. Le moteur étant à l'horizontal.
- Remplir le réservoir avec de l'essence sans plomb octane 98 sans aller jusqu'à débordement. En cas d'éclaboussures, essuyer avec un chiffon.

DÉMARRAGE DU MOTEUR :

⚠ Avant de lancer le moteur, s'assurer que personne ne se trouve dans la zone dangereuse des outils, ni à proximité du moteur. Se placer à côté derrière la machine.

Ouvrir le robinet d'essence, s'il y a lieu, mettre la manette du moteur sur "START" ou "CHOKE", faire de même avec la manette d'accélération au mancheron. Saisir la poignée du lanceur et tirer énergiquement pour passer la compression du moteur. Lorsque le moteur tourne , ramener la manette du moteur sur "RUN" ou "MINI" et régler la vitesse avec la manette d'accélération.

Lorsque le moteur est chaud, amener la manette du moteur à mi-course pour le démarrer.

On arrête le moteur en plaçant la manette d'accélération au mancheron sur "STOP" ou en appuyant sur le bouton coupe-circuit s'il y a lieu.

TROUBLE-FREE RUNNING INSTRUCTIONS

⚠ *WARNING : Before attempting maintenance on your cultivator, make sure the engine is stopped and the spark plug lead has been disconnected. WARNING : Do not plug petrol into the petrol tank when the engine is hot. Wait until it has cooled down and use a funnel so as to avoid petrol splashing onto the engine.*

BEFORE STARTING UP :
(see engine manual)

- *The engine is supplied WITHOUT oil. Fill the engine to the correct level with grade 15W40. Using a screwdriver, remove the filler cap and carefully fill to overflowing. The capacity is 0,6 litres when the cultivator is on level ground.*
- *Fill the petrol tank with 98 octane un-leaded fuel, being careful not to overfill. Wipe away any fuel splashes with a rag.*

STARTING THE ENGINE :

⚠ *WARNING : Before starting the engine make sure that nobody is near the rotating blades or the engine, get them to one side or behind the machine. Open the fuel tap, if fitted, and place the choke lever on "START", then place the throttle lever in its corresponding position. Grasp the starting handle and pull energetically to get over the compression stroke.Once the engine has started, push the choke lever to "RUN" or "MINI" and set the running speed with the throttle lever. When the engine is hot, set the choke lever to mid-course for starting. The motor is stopped by placing the throttle lever on "STOP" and pushing the circuit breaker if fitted.*

ANGABEN FÜR DAS GUTE FUNKTIONIEREN

⚠ *ACHTUNG : Vor jedem Eingriff an der Maschine, bitte den Motor abstellen und das Zündkerzenkabel herausziehen. Nie bei heißem Motor Kraftstoff nachfüllen. Warten bis er kalt ist. Um Spritzer zu vermeiden, bitte einen Trichter benützen.*

VORBEREITUNG :
(sich an die Motoranleitung halten)

- *Der Motor wird ohne Motorenöl geliefert. Bitte ein waschaktives Öl von guter Qualität nehmen, Typ 15 W 40. Mit Hilfe eines Schraubendrehers den Stopfen abnehmen. Langsam bis zum Überlauf eingieBen. Inhalt 0,6 Liter. Der Motor muß horizontal stehen.*
- *Den Tank mit bleifreiem Benzin, Oktanzahl 98, füllen, ohne daß er überläuft, Spritzer mit einem Tuch entfernen.*

ANLAUFEN DES MOTORS

⚠ *ACHTUNG : Bevor Sie den Motor anlassen, vergewissern Sie sich, daß sich niemand in der gefährlichen Zone der Werkzeuge oder in Motornähe befindet. Sich hinten neben die Motorhacke stellen.*

Den Benzinhahn öffnen. Den Motorhebel auf "START" oder "CHOKER" stellen, den Gashebel am Griff auch so einstellen. Mit dem Handgriff stark das AnlaBerkabel herausziehen, bis der Motor den notwendigen Druck hat. Wenn der Motor läuft, den Motorhebel auf "RUN" oder "MINI" stellen und die Geschwindigkeit mit dem Gashebel einstellen.

Wenn der Motor warm ist, den Motorhebel zum Anlaufen lassen nur auf die Hälfte einstellen.

Zum Motor abstellen, den Gashebel auf "STOP" bringen, oder auf den Abstellknopf, falls vorhanden, drücken.

CONSIGLI PER UN BUON FUNZIONAMENTO

⚠ *Prima di effettuare qualsiasi intervento sulla macchina, il motore deve esse spento ed il cappuccio della candela deve essere disinserito. Non aggiungere carburante a motore caldo bensi attendere che si raffreddi. Per questa operazione utilizzare un imbuto od altro attresso per evitare spruzzi.*

PREPARAZIONE :
(Vedi notizie riguardanti il motore)

Il motore viene spedito senza olio. Si consiglia di usare un olio detergente di buona qualita del tipo 15 W 40 servendosi di un cacciavite togliere il tappo. Riempire sino all' orlo versando lentamente. Capacita 0,6 litri. Il motore deve essere orrizzontale.

Riempire il motore con benzina senza piombo a 98 ottani senza farla traboccare. In caso di spruzzi asciugare con uno straccio.

AVVIO DEL MOTORE

⚠ *Prima di avviare il motore assicurarsi che non ci siano persone nella zona di pericolo. Nelle vicinanze delle frese ed in prossimita del motore. Porsi a lato o lietro la macchine.*

Aprire il rubinetto della benzina (se esistente). Posizionare la leva del motor e la leva dell' acceleratore sul manico nella posizione "START" o "CHOKE". Impugnare la maniglia dell' avviatore e tirare energicamente per vincere la compressione del motore.

A motore avviato riportare la leva del motore in posizione "RUN"o "MINI" e regolare la velocita con la leva d'accelerazione. Il motore si arresta posizionando la leva dell' acceleratore posta sul manico nella posizione "STOP" o premendo il pulsante di massa se esistente.

ENTRETIEN

⚠ Pour toutes les opérations d'entretien ou de contrôle, le moteur est arrêté, le fil de bougie déconnecté.

ENTRETIEN MACHINE

- Contrôler périodiquement le serrage des boulons et des vis.
- Après chaque utilisation, la machine est nettoyée soigneusement. Laver au jet d'eau sans le diriger directement sur le moteur. Eviter le nettoyeur haute-pression.
- Enlever herbes, racines, terre sur les outils et carter.
- Huiler les différentes articulations (huile moteur).
- Le carter de réduction est graissé en usine. Il ne nécessite aucun entretien.

ENTRETIEN MOTEUR (se reporter à la notice du moteur)

- Contrôler le niveau d'huile avant chaque utilisation.
- La première vidange s'effectue après 5 heures d'utilisation, ensuite toutes les 25 heures, la vidange s'effectue moteur chaud.
- Contrôler l'état du filtre à air. Nettoyer la cartouche toutes les 25 heures d'utilisation en tapotant doucement sur une surface plane.

  La remplacer si nécessaire.
- Contrôler l'état de propreté du moteur. Nettoyer régulièrement les ailettes de refroidissement ainsi que tous les endroits obstrués par la poussière ou l'herbe.
- Contrôler régulièrement l'état de la bougie ainsi que les électrodes.

MAINTENANCE

⚠ *WARNING : The engine must be stopped and the spark plug lead disconnected before any maintenance is carried out.*

GENERAL MAINTENANCE

- *Check the tightness of the nuts and bolts on your cultivator periodically.*
- *Carefully clean away all earth and grass with a water-hose being careful not to direct water onto the engine.*
  Avoid high-pressure cleaning methods.
- *Lightly oil the various moving parts with engine oil.*
- *The transmission case is lubrificated at the factory and requires no maintenance.*

ENGINE MAINTENANCE (see engine maintenance manual)

- *Check the oil level before starting the engine.*
- *The first oil change is made when the engine has completed 5 hours running time. Thereafter, every 25 hours. Drain oil whilst the engine is hot.*
- *Check the condition of the air filter. Remove dust and grass from around the filter fins by tapping the filter on a flat surface.*

  Replace the filter when neces-sary.
- *Check that the motor is clean. Keep the engine cooling fins clean and any areas that may have become clogged by dust and grass.*
- *Check the condition of the spark plug and its electrodes at regular intervals.*

WARTUNG

⚠ *ACHTUNG : Vor jeder Wartung, bitte den Motor abstellen und das Zündkerzenkabel herausziehen.*

WARTUNG DER MASCHINE

- *Regelmäßig den Sitz der Schrauben und Muttern überprüfen.*
- *Nach jedem Gebrauch, die Maschine sorgfältig reinigen. Mit Wasserchlauch abspritzen, ohne direkt den motor zu waschen. Hochdruckreiniger vermeiden !*
- *Gras, Wurzein und Erde an den Werkzeugen und dem Gehäuse entfernen.*
- *Die verschiedenen Scharniere und Gelenke ölen (Motorenöl).*
- *Das Getriebegehäuse wurde im Werk geschmiert, es benötigt keine Wartung.*

MOTORWARTUNG (sich an die Motoranleitung halten)

- *Vor jedem Gebrauch den Ölstand prüfen.*
- *Der erste Ölwechsel wird nach 5 Stunden durchgeführt, anschließend alle 25 Stunden. Der Ölwechsel findet bei warmem Motor statt.*
- *Den Luftfilter überprüfen, alle 25 Stunden sâubern, indem man ihn leicht auf eine ebene Fläche klopft. Falls nötig auswechsen.*
- *Die Sauberkeit des Motors überprüfen. Regelmäßig die Kühlrippen reinigen. Alle mit Staub oder Gras Verschmutzten Stellen reinigen.*
- *Regelmäßig die Zündkerze und die Elektroden kontrollieren.*

MANUTENZIONE

⚠ *Prima di effetuarq ualsiasi operazione di manutenzione e/o controllo. Il motore deve essere fermo ed il cappuccio della candela disinserito.*

MANUTENZIONE DELLA MACCHINA

- *Controllare periodicamente il fissaggio dei bulloni e delle viti.*
- *Dopo ogni utilizzo la macchina deve essere pulita scrupolosamente lavandola con un getto d'acqua senza dirigerlo direttamente sul motore. Evitare i getti ad alta pressione.*
- *Togliere erba, radici, terra dalle frese e dal carter.*
- *Oliare le varie parti in movimento, utilizzare lo stesso tipo di olio impiegato sul motore. Il carter di riduzione contiene grasso e non necessita di manutenzione.*

MANUTENZIONE DEL MOTORE (Fare riferimento alle istruzioni)

- *Riguardanti il motore. Controllare il livello dell' olio prima di ogni utilizzo.*
- *Il primo cambio va effettuato dopo 5 ore di utilizzo. Successivamente ogni 25 ore. Lo svuotamente va effettuato a motore caldo. Controllare lo stato del filtro aria. Pulire la cartuccia ogni 25 ore du utilizzo sbattendola dolcemente siu di una superficie piana. Se necessario sostituirla. Controllare lo stato di pulizia del motore. Pulire regolarmente le alette di raffreddamente e tuite le parti ostruite da polvere o erba. Controllare periodicamente lo stato della condela.*

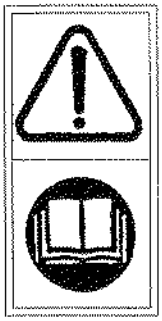

- **ATTENTION / DANGER** - Lire le manuel d'utilisation avant l'utilisation de la machine.
- **CAUTION / DANGER** - Carefully read this operating manual before operating.
- **ACHTUNG / GEFAHR** - Vor dem Gebrauch des Machine, lesen Sie die Gebrauchsanweisung.
- **ATTENZIONE / AVVERTIMENTO** - Leggere il libretto di istruzioni prima di usare la machina.
- **PRECAUTION / PELIGRO** - Lea detenidamente este manual de funcionamento antes de usar.
- **OPGELET / GEVAAR** - Lees de gebruikershandleiding voor u deze machine.
- **ATTENÇÃO / PERIGO** - Ler o manual do utilizador antes de por o escarificador de relva en funcionamento.

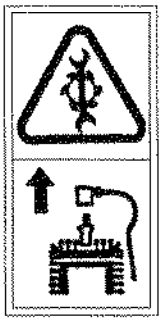

- Débrancher le fil de bougie avant toute intervention d'entretien ou réparation.
- For inspection or maintenance, remove the cable.
- Nehmen Sie das Kabel ab bevor Sie jede Wartung oder Reparatur beginnen.
- Scollegare il cavo prima di effettuare qualsiasi operazione di manutenzione o roparazione.
- Retire el cable antes de cualquier operacion de mantemiento o de reparacion.
- Neemen de kabel voor u anderhoud of reparaties aan uw maaier ultvoet.
- Antes de qualquer operação no motor ou na maquina, disligue o cabo.

- **ATTENTION / DANGER** : Outil coupant rotatif.
- **CAUTION / DANGER** : Rotating cutting tool.
- **ACHTUNG / GEFAHR** : Werkzeug laüft nach !
- **ATTENZIONE / AVVERTIMENTO** : Rotazione affilate lama.
- **PRECAUTION / PELIGRO** : Rotaciones afiladas cuchillas.
- **OPGELET / GEVAAR** : Scherp mes.
- **ATTENÇÃO / PERIGO** : Rotação lamina.

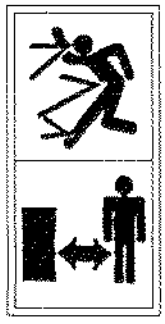

- Eloignez toute personne de la zone dangereuse.
- Keep all people away from working area.
- Während des Gebrauchs, halten Sie dritte von der Arbeitszone entfernt.
- Tenere le persone al di fuori dell' area di lavoro, durante l'uso.
- Durante l'utilizzo allontanate le persone de la zona di lavoro.
- Laat omstanders nooit in de nabijheid van de machine komen terwijl u er mee werkt.
- Afaste as pessoas e as criancas da maquina en funcionamento.

POUR UNE UTILISATION EN TOUTE SÉCURITÉ

⚠ Ce symbole signifie : **"ATTENTION DANGER"**
Si ces instructions ne sont pas suivies scrupuleusement, il pourrait en résulter des accidents corporels ou matériels, de même que la suppression de la garantie.

- Ne faites pas tourner le moteur dans un local clos. Les gaz d'échappement contiennent un monoxyde de carbone, gaz inodore et mortel.
- Des modifications non agréées de cette machine ou de ce moteur et son utilisation pour des applications inappropriées pourraient dégrader son fonctionnement, sa sécurité d'emploi et sa durée de vie. N'utilisez que des pièces de rechange approuvées.
- N'utilisez pas le moteur sans pot d'échappement ou sans filtre à air.
- N'utilisez pas le starter pour arrêter le moteur.
- Ne remplissez pas le réservoir d'essence lorsque le moteur est en marche. Laissez refroidir le moteur 2 minutes avant de faire le remplissage.
- Essuyer toute l'essence répandue avant de mettre le moteur en marche.
- L'essence étant un liquide hautement inflammable, éloignez toute source d'incendie : cigarette, allumette, braise, etc...
- N'utilisez pas le moteur dans les zones boisées, broussailleuses ou sur les terrains couverts d'herbes sèches, si le pot n'est pas muni d'un pare-étincelles.
- Avant toute intervention sur le moteur ou la machine, débrancher le câble de la bougie.

SÉCURITÉ DES PERSONNES

- Ne laissez personne utiliser la machine sans lui avoir donné au préalable des instructions correctes.
- Eloignez les gens et les enfants de la machine en cours d'utilisation.
- Ecartez les mains et les pieds des organes brûlants ou en mouvement.
- Ne restez pas devant l'appareil et à proximité des outils lorsqu'ils tournent.
- Libérez la zone de travail de tout objet qui pourrait être happé ou projeté.
- Arrêtez le moteur lorsque vous quittez la machine, même un court instant.
- S'il existe un danger de glissade dans un terrain en pente, maintenir fermement le mancheron, et/ou retenez la machine à l'aide d'une corde tenue par une autre personne. Cette personne doit se trouver au dessus et à distance suffisante par rapport à la machine.

A FEW SAFETY PRECAUTIONS

⚠ *This symbol means :* ***"WARNING - DANGER"***
If these instructions are not followed carefully, they could lead to bodily injury or material damage, they can even render the guarantee null and void.

- *Do not run the engine in an enclosed space. Exhaust fumes contain carbonmonoxide, a colourless and mortal gas.*
- *Non-homologated modifications to this machine and engine and to its use for other purposes for which it was intended can affect its functioning, its security in use and its durability. Use only approved spare parts on this machine.*
- *Do not run the engine without its exhaust silencer nor its air filter.*
- *Do not use the choke control to stop the engine.*
- *Do not fill the fuel tank whilst the engine is running. Leave it to cool down for about 2 minutes before attempting to fill the tank.*
- *Remove all excess fuel with a cloth before re-starting the engine.*
- *Petrol is highly inflammable, make sure no sources of fire are in the vicinity, such as cigarettes, matches, and so on...*
- *Do not use this machine in over-dry woodland and dry grassy areas. If the exhaust pipe has not been fitted with a spark arrestor.*
- *Before attempting to work on the engine, make sure the spark-plug lead has been disconnected.*

PERSONNAL SAFETY PRECAUTIONS

- *Do not let anyone use this machine unless you are sure they have adequate knowledge of how to use it.*
- *Keep children an people away from this machine whilst you are working with it.*
- *Keep your hands and feet away from the hot engine and moving parts do not stand in front of the machine or near the rotary blades when the engine is running.*
- *Clear the ground to be tilled of any loose objects that can be thrown up by the cultivator blades.*
- *Stop the engine when you leave the machine standing, even if is for a short time.*
- *If there is the possibility that the machine begins to slide on sloping ground, maintain a firm grip on the handlebars, or try to get the help of another person to hold the machine with you, and/or try to get a rope round it, the other person must be uphill of the machine and a safe distance away.*

FUR EINE SICHERE-BENÜTZUNG

⚠ *Dieses Zeichen bedeutet :* ***"ACHTUNG - GEFAHR "***
Falls diese Anordnungen nicht befolgt werden, kann es zu Verletzungen oder Materialschäden kommen, selbst die Garantie kann gestrichen werden.

- *Lassen Sie den Motor nicht in einem geschlossenen Raum laufen. Die Abgase enthalten Kohlenmonoxid, ein geruchloses und tötliches Gas.*
- *Unerlaubte Anderungen dieser Maschine oder des Motors sowie die Benützung für nicht vorgesehene Arbeiten können das Funktionieren, die Benützungssicherheit und die Lebensdauer herabsetzen. Nehmen Sie nur genehmigte Zubehörteile.*
- *Den Motor nicht ohne Auspuflopf oder Luftfilter laufen lassen.*
- *Nehmen Sie nicht den Starter um den Motor abzustellen.*
- *Füllen Sie den Benzintank nicht bei laufendem Motor. Diesen 2 Minuten abkühlen lassen, bevor Sie Benzin nachfüllen.*
- *Benzinspritzer vor dem Motor anlassen abwischen.*
- *Da sich Benzin leicht entflammt, jede Feuerquelle entfernen : Zigarette, Streichhölzer, Glut, usw.*
- *Wenn der Auspufflopf nicht mit einem Funkenfänger versehen ist, den Motor bitte nicht im Wald, in Hecken oder auf Gelände mit trockenem Gras benützen.*
- *Bevor Sie an den Motor oder die Maschinenteile greifen, bitte das Zündkernkabel abziehen.*

SICHERHEIT FÜR DIE BENÜTZER

- *Lassen Sie niemand die Maschine bedienen, ohne ihn vorher eingewiesen zu haben.*
- *Kinder und andere Personen während der Arbeit entfernt halten.*
- *Hände und Füße von heißen oder Sich bewegenden Teilen entfernt halten. Bleiben Sie während dem Laufen nicht vor der Maschine oder in der Nähe der Werkzeuge stehen.*
- *Befreien Sie das Gelände von jeglichen Gegenständen, die von der Maschine ergriffen und weggeschleudert werden könnten.*
- *Den Motor immer abstellen, selbst wenn Sie sich auch nur einige Schritte entfernen.*
- *Falls im Gelände Rutschgefahr (bergiges Gelände) besteht, den Sterz gut festhalten und/oder die Maschine mit einem Seil zurückhalten, das von jemand gehalten wird. Diese Person muß oberhalb und in genügend Abstand stehen.*

PER UN UTILIZZO SICURO

⚠ *Questo simbolo significa :* ***"ATTENZIONE - PERICOLO"***
Se queste istruzioni von vengono scrupompsamente sseguite si possono verificare incidenti a persone o cose con decadiment della garanzia.

- *Non far funzione il motore in un locale chiuso. I gas di scarico contengono monossido di carbonio. Gas inodore e mortale.*
- *Modifiche non consentite apportate alla macchina ed al motore nonche l'utilizzo improprio possono comprometterne il funzionamento. La sicurezza a la durata utilizzara solamente parti di ricambio originali.*
- *Non far funzionare il motore senza silenziatoxe o senza filtro aria.*
- *Non utilizzate lo starter per fermare il motore.*
- *Non riempire il serbatoio della benzina quando il motore e in funzione. Lasciarlo raffreddare per due minuti prima di riempirlo.*
- *Prima di avviare il motore ascuigare la benzina eventualmente fuoriuscita.*
- *La benzina e un liquido fortemente infiammabile. Alloontanare quindi le fonti d'incendio : sigarette, fiammiferi, braci, ecc. Non utilizzare il motore in zone boscore. Incolte e su terreni ricoperti d'erbz secca. Se il silenziatore non e dotato di un para-scintille.*
- *Prima di qualsiasi intervento sul motore o sulla macchina. Disinserire il cappuccio della candela.*

SICUREZZA DELLE PERSONE

- *Non permettete ad alcuno l'utilizzo della macchina senza aver in precedenza impartito le corrette instruzioni.*
- *Durante l'utilizzo allontanate i bambini e le persone.*
- *Tenere le mani ed i piedi lontano dalle parti che possono provocare scottature o che sono in movimento.*
- *Non porsi di fronte alla macchina o in prossimita delle frese quando girano.*
- *Liberare la zona di lavoro da qualstasi oggetto che possa essere lanciato o che possa incastrarsi nelle frese.*
- *Quando abbandonate la macchina spegnete il motore anche se solo per pochi istanti.*
- *Se esiste il pericolo di scivolare su di un terreno in salita. Impugnare saldamente il manico ed ancorare la macchina per mezzo di una fune tenuta da un altra persona che deve trovarsi di sopra e ad una distanza sufficiente.*

ACCESSOIRES ADAPTABLES

30885		Paire de couronnes simples soudées 40x4 + capots de protection
30905		Paire de couronnes simples rivées 40x4 + capots de protection
18394		Jeu de 2 couronnes 6 outils type "jardinier"
18655		Buttoir à ailes réglables avec attelage
18640		Herse "Etoile" - 11 dents Extensible de 0,27 à 0,67 m
30921		Paire de roues métalliques à crampons ø 250
18656		Attelage pour 18640 et 18630
18630		Canadien "Etoile" - 5 dents Extensible de 0,28 à 0,63 m
30275		Kit émousseur

OPTIONAL ACCESSORIES

30885		Pair of basic welded Hoe wheels 40x4 with stone-guard
30905		Pair of basic riveted Hoe wheels 40x4 with stone-guard
18394		Set of "Gardeners" 6-bladed Hoe wheels
18655		Ridger with linkage
18640		"Star" Harrow - 11 Tines Adjustable from 11 Inches to 27 Inches
30921		Pair of spiked metal wheels Dia. 10 Inches
18656		Tow bar for 18640 and 18630
18630		"Star" grubber - 5 Tines Adjustable from 11 Inches to 25 Inches
30275		De-thatcher

ADAPTIERBARE ZUBERHÖRTEILE

30885		Paar einfache Kränze geschweißt 40x4 mit schutzhaube
30905		Paar einfache Kränze verbolzt 40x4 mit schutzhaube
18394		Satz zwei Kränze 6 Werkzeuge Typ "Gärtner"
18655		Häufelpflug mit einstellbaren Flügeln, mit Kuppelvorrichtung
18640		Egge "Stern" - 11 Zähne ausziehbar von 0,27 bis 0,67 m
30921		Paar Metallräder mit Krampen Durchmesser 250
18656		Kuppelvorrichtung für 18640 und 18630
18630		Grubber "Stern" - 5 Zähne ausziehbar von 0,28 bis 0,63 m
30275		Moosentferner

BRIGGS & STRATTON

110000, 120000, 200000, 210000

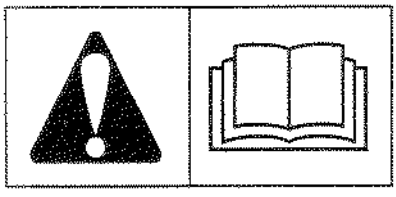

(GB) Operating & Maintenance Instructions
(D) Betriebsanleitung & Wartungsvorschriften
(DK) Drifts- og vedligeholdelsesvejledning
(E) Instrucciones de Mantenimiento & Operación
(F) Instructions d'utilisation et de maintenance
(GR) Οδηγίες Λειτουργίας & Συντήρησης
(I) Istruzioni per l'uso e la manutenzione
(N) Anvisninger for bruk og vedlikehold
(NL) Gebruiksaanwijzing
(P) Instruções de operação e de manutenção
(S) Instruktionsbok
(SF) Käyttö & Huolto-ohjeet

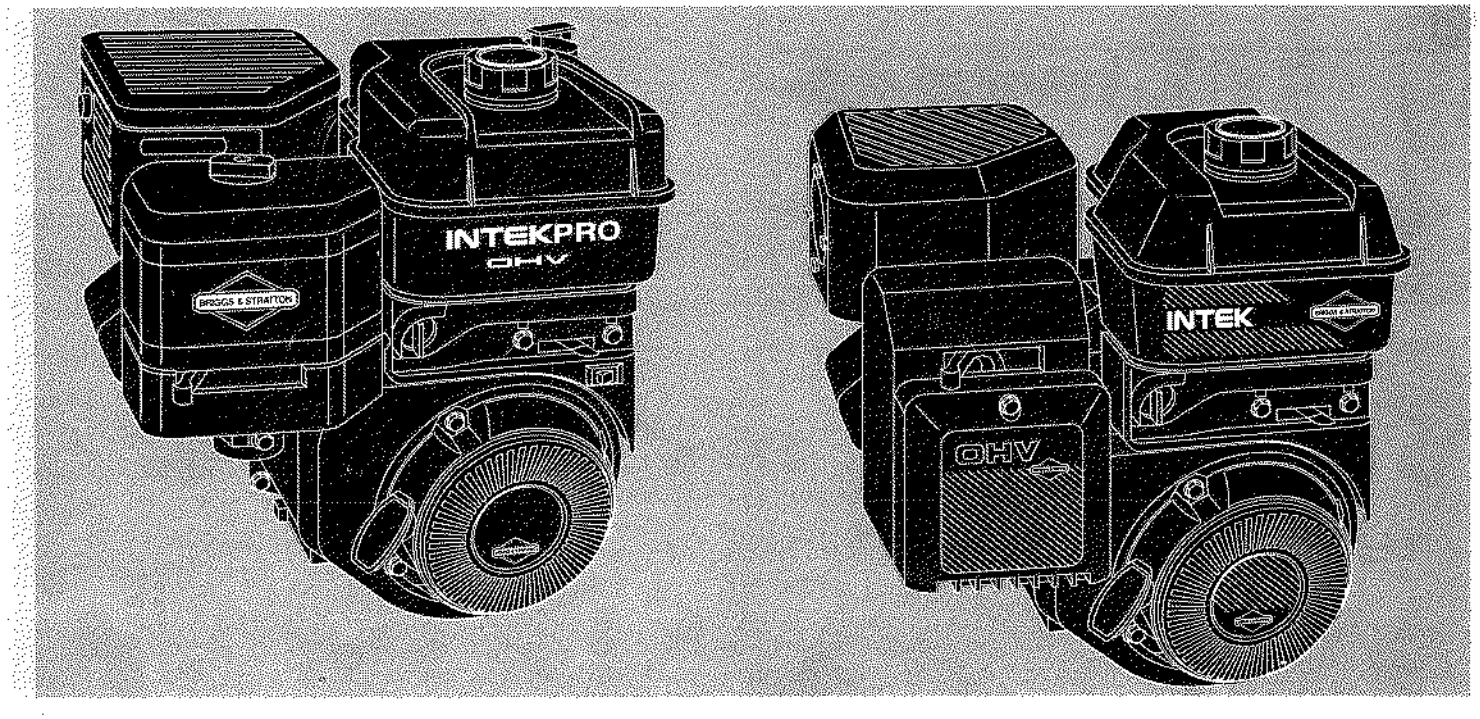

Briggs & Stratton Corporation
Milwaukee, Wisconsin 53201
www.briggsandstratton.com

© Copyright 2003 by Briggs & Stratton Corporation

FORM NO. MS-6737-5/03
PRINTED IN U.S.A.

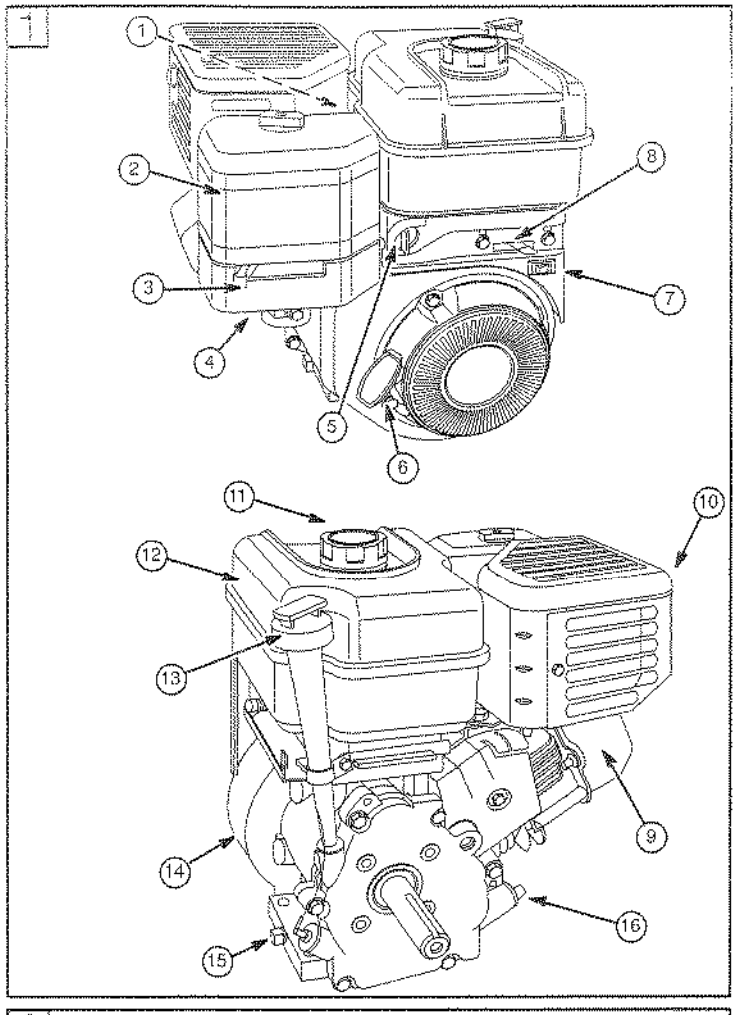
1
2
3
4
5
6
7
8
9
10
11
12
13
14
15
16

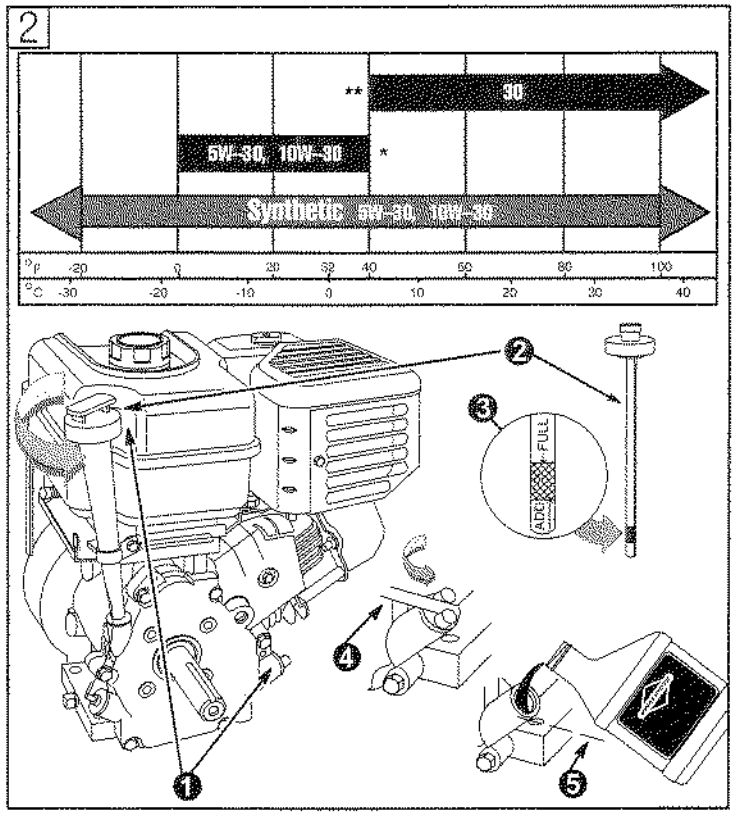
2
**
30
5W-30, 10W-30
*
Synthetic 5W-30, 10W-30
°F -20 0 20 32 40 60 80 100
°C -30 -20 -10 0 10 20 30 40
FULL
ADD

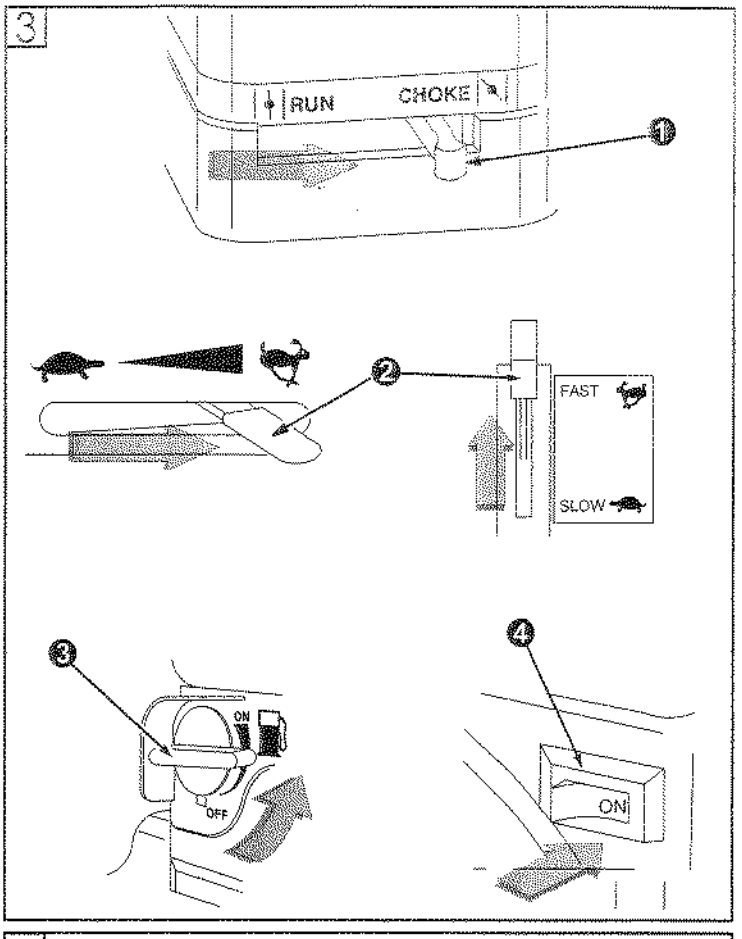
3
RUN
CHOKE
FAST
SLOW
ON
OFF
ON

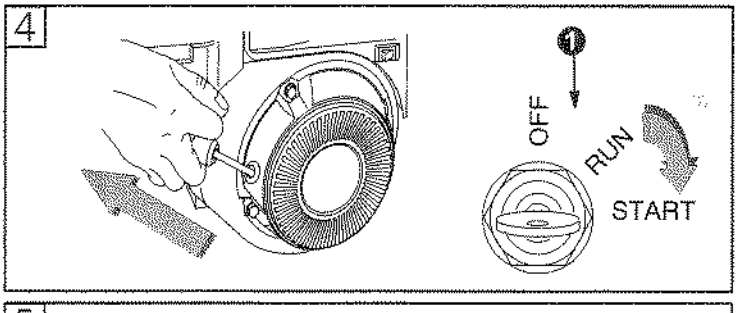
4
OFF
RUN
START

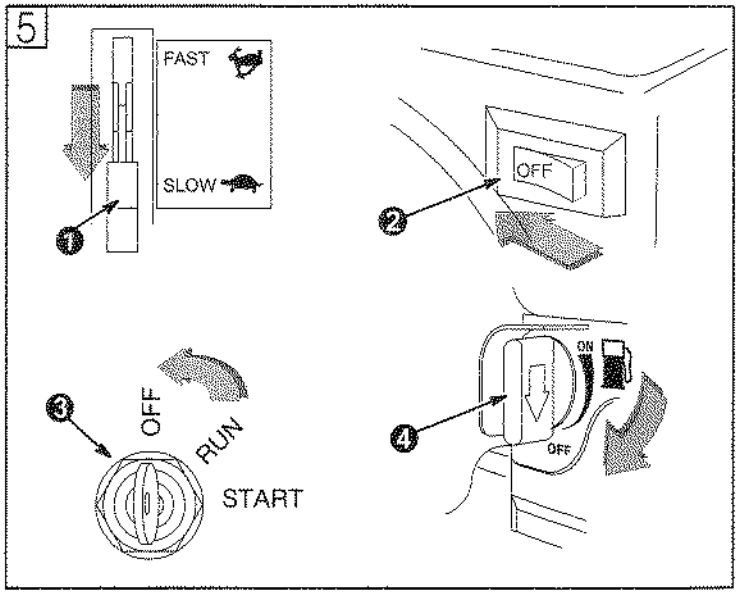
5
FAST
SLOW
OFF
OFF
RUN
START
ON
OFF

Note: (This note applies only to engines used in the U.S.A.) Maintenance, replacement or repair of the emission control devices and systems may be performed by any nonroad engine repair establishment or individual. However, to obtain no charge repairs under the terms and provisions of the Briggs & Stratton warranty statement, any service or emission control part repair or replacement must be performed by a factory authorized dealer.

GB

How To Use Manual Figures

[1] - [9] refer to figures inside covers.

① - ⑲ refer to engine components in figure [1].

❶ - ❾ refer to part/action in figures.

Record your engine Model, Type and Code numbers here for future use.

_____ _____ _____

Record your date of purchase here for future use.

_____

In the state of California, OHV Model Series 110000 and 120000 engines are certified by the California Air Resources Board to meet emissions standards for 125 hours; Model Series 200000 and 210000 for 250 hours. Such certification does not grant the purchaser, owner or operator of this engine any additional warranties with respect to the performance or operational life of this engine. This engine is warranted solely according to the product and emissions warranties stated elsewhere in this manual.

Technical Information

POWER RATINGS: The power ratings for an individual engine model are initially developed by starting with SAE (Society of Automotive Engineers) code J1940 (Small Engine Power & Torque Rating Procedure) (Revision 2002-05). Given both the wide array of products on which our engines are placed, and the variety of environmental issues applicable to operating the equipment, it may be that the engine you have purchased will not develop the rated horsepower when used in a piece of power equipment (actual "on-site" power). This difference is due to a variety of factors including, but not limited to, the following: differences in altitude, temperature, barometric pressure, humidity, fuel, engine lubrication, maximum governed engine speed, individual engine to engine variability, design of the particular piece of power equipment, the manner in which the engine is operated, engine run-in to reduce friction and clean out of combustion chambers, adjustments to the valves and carburetor, and other factors. The power ratings may also be adjusted based on comparisons to other similar engines utilized in similar applications, and will therefore not necessarily match the values derived using the foregoing codes.

Engine Components *(see fig. [1])*

① Spark plug wire
② Air cleaner
③ Choke
④ Carburetor
⑤ Fuel shut-off valve
⑥ Rope handle
⑦ Stop switch/Oil Gard®, if equipped
⑧ Throttle
⑨ **Engine** **Model** **Type** **Code**
xxxxxx xxxx xx xxxxxxxx
⑩ Muffler/Spark arrester, if equipped
⑪ Fuel fill
⑫ Fuel tank
⑬ Oil fill/Dipstick, if equipped
⑭ Blower housing
⑮ Oil Drain plug
⑯ Oil filler plug

Hazard Symbols and Meanings

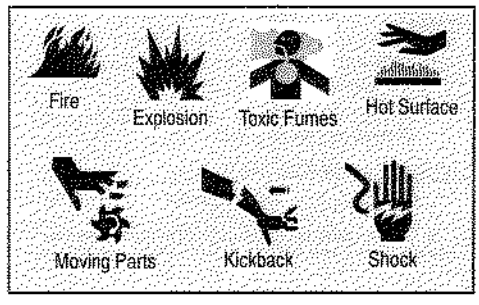

International Symbols and Meanings

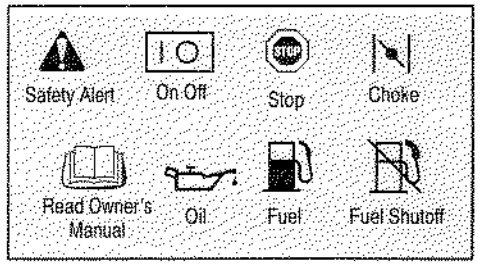

Safety Precautions

BEFORE OPERATING ENGINE

- Read entire Operating & Maintenance Instructions AND the instructions for the equipment this engine powers.*
- Failure to follow instructions could result in serious injury or death.

* Briggs & Stratton does not necessarily know what equipment this engine will power. For that reason, you should carefully read and understand the operating instructions for the equipment on which your engine is placed.

THE OPERATING & MAINTENANCE INSTRUCTIONS CONTAIN SAFETY INFORMATION TO

- Make you aware of hazards associated with engines
- Inform you of the risk of injury associated with those hazards, and
- Tell you how to avoid or reduce the risk of injury.

The safety alert symbol is used to identify safety information about hazards that can result in personal injury.

A signal word (DANGER, WARNING, or CAUTION) is used with the alert symbol to indicate the likelihood and the potential severity of injury. In addition, a hazard symbol may be used to represent the type of hazard.

DANGER indicates a hazard which, if not avoided, **will result in death or serious injury.**

WARNING indicates a hazard which, if not avoided, **could result in death or serious injury.**

CAUTION indicates a hazard which, if not avoided, **might result in minor or moderate injury.**

CAUTION, when used **without** the alert symbol, indicates a situation that **could result in damage to the engine.**

WARNING

The engine exhaust from this product contains chemicals known to the State of California to cause cancer, birth defects, or other reproductive harm.

WARNING

Gasoline and its vapors are extremely flammable and explosive.

Fire or explosion can cause severe burns or death.

WHEN ADDING FUEL

- Turn engine OFF and let engine cool at least 2 minutes before removing gas cap.
- Fill fuel tank outdoors or in well-ventilated area.
- Do not overfill fuel tank. Fill tank to approximately 1-1/2 inches below top of neck to allow for fuel expansion.
- Keep gasoline away from sparks, open flames, pilot lights, heat, and other ignition sources.
- Check fuel lines, tank, cap, and fittings frequently for cracks or leaks. Replace if necessary.

WHEN STARTING ENGINE

- Make sure spark plug, muffler, fuel cap and air cleaner are in place.
- Do not crank engine with spark plug removed.
- If fuel spills, wait until it evaporates before starting engine.
- If engine floods, set choke to OPEN/RUN position, place throttle in FAST and crank until engine starts.

WHEN OPERATING EQUIPMENT

- Do not tip engine or equipment at angle which causes gasoline to spill.
- Do not choke carburetor to stop engine.

WHEN TRANSPORTING EQUIPMENT

- Transport with fuel tank EMPTY or with fuel shut-off valve OFF.

WHEN STORING GASOLINE OR EQUIPMENT WITH FUEL IN TANK

- Store away from furnaces, stoves, water heaters or other appliances that have pilot light or other ignition source because they can ignite gasoline vapors.

WARNING

Starting engine creates sparking.

Sparking can ignite nearby flammable gases.

Explosion and fire could result.

- If there is natural or LP gas leakage in area, do not start engine.
- Do not use pressurized starting fluids because vapors are flammable.

WARNING

Engines give off carbon monoxide, an odorless, colorless, poison gas.

Breathing carbon monoxide can cause nausea, fainting or death.

- Start and run engine outdoors.
- Do not start or run engine in enclosed area, even if doors or windows are open.

WARNING

Unintentional sparking can result in fire or electric shock.

Unintentional start-up can result in entanglement, traumatic amputation, or laceration.

BEFORE PERFORMING ADJUSTMENTS OR REPAIRS

- Disconnect spark plug wire and keep it away from spark plug.
- Disconnect battery at negative terminal (only engines with electric start).

WHEN TESTING FOR SPARK

- Use approved spark plug tester.
- Do not check for spark with spark plug removed.

WARNING

Running engines produce heat. Engine parts, especially muffler, become extremely hot.

Severe thermal burns can occur on contact.

Combustible debris, such as leaves, grass, brush, etc. can catch fire.

- Allow muffler, engine cylinder and fins to cool before touching.
- Remove accumulated combustibles from muffler area and cylinder area.
- Install and maintain in working order a spark arrester before using equipment on forest-covered, grass-covered, brush-covered unimproved land. The state of California requires this (Section 4442 of the California Public Resources Code). Other states may have similar laws. Federal laws apply on federal land.

WARNING

Rotating parts can contact or entangle hands, feet, hair, clothing, or accessories.

Traumatic amputation or severe laceration can result.

- Operate equipment with guards in place.
- Keep hands and feet away from rotating parts.
- Tie up long hair and remove jewelry.
- Do not wear loose-fitting clothing, dangling drawstrings or items that could become caught.

WARNING

Rapid retraction of starter cord (kickback) will pull hand and arm toward engine faster than you can let go.

Broken bones, fractures, bruises or sprains could result.

- When starting engine, pull cord slowly until resistance is felt, then pull rapidly.
- Remove all external equipment/engine loads before starting engine.
- Direct coupled equipment components such as, but not limited to, blades, impellors, pulleys, sprockets, etc., must be securely attached.

Oil Recommendations *(see fig. 2)*

Engine shipped from Briggs & Stratton without oil. Before starting engine, fill with oil. Do not over-fill. Optional gear reduction may not be filled with oil. If engine is equipped with gear reduction, see oil checking/filling instructions ***(Maintenance***, next page). Use a high quality detergent oil classified "For Service SF, SG, SH, SJ" or higher such as Briggs & Stratton 30W, Part Number 100005. Use no special additives with recommended oils. Do not mix oil with gasoline.

Note: Synthetic oil meeting ILSAC GF-2, API certification mark and API service symbol (shown at left) with "SJ/CF ENERGY CONSERVING" or higher, is an acceptable oil at all temperatures. **Use of synthetic oil does not alter required oil change intervals.**

* Air cooled engines run hotter than automotive engines. The use of non-synthetic multi-viscosity oils (5W-30, 10W-30, etc.)in temperatures above 40° F (4° C) will result in higher than normal oil consumption. When using a multi-viscosity oil, check oil level more frequently.

** SAE 30 oil, if used below 40° F (4° C), will result in hard starting and possible engine bore damage due to inadequate lubrication.

Check oil level.

Oil Capacity: Models 110000, 120000 is about 21 oz. or 0.6 liter; Models 200000, 210000 is about 28 oz. or 0.8 liter.

Place engine level and clean around oil fill ❶.

Remove dipstick ❷, wipe with clean cloth, insert and tighten down again. Remove dipstick and check oil level. Oil should be at FULL mark ❸. If oil is required, add slowly. Do not over-fill.

OR

Remove oil filler plug ❹. Oil should be full to overflowing ❺.

Tighten dipstick or oil filler plug firmly before starting engine.

Fuel Recommendations

Use clean, fresh, lead-free gasoline with a minimum of 85 octane. Leaded gasoline may be used if it is commercially available and if unleaded is unavailable. Purchase fuel in quantity that can be used within 30 days. See ***Storage***.

In U.S.A. leaded gasoline may not be used. Some fuels, called oxygenated or reformulated gasolines, are gasolines blended with alcohols or ethers. Excessive amounts of these blends can damage the fuel system or cause performance problems. If any undesirable operating symptoms occur, use gasoline with a lower percentage of alcohol or ether.

This engine is certified to operate on gasoline. Exhaust Emission Control System: EM (Engine Modifications).

Do not use gasoline which contains Methanol. Do not mix oil with gasoline.

For engine protection, we recommend using Briggs & Stratton Fuel Stabilizer available from an Authorized Briggs & Stratton Service Dealer.

Check fuel level.

Before refueling, allow engine to cool 2 minutes.

Clean around fuel fill before removing cap to refuel. Fill tank to approximately 1-1/2 inches below top of neck to allow for fuel expansion. Be careful not to overfill.

Starting *(see figs. 3 4)*

ALWAYS KEEP HANDS AND FEET CLEAR OF EQUIPMENT MOVING PARTS.

Do not use a pressurized starting fluid. Vapors are flammable.

Start, store and fuel equipment in level position.

CAUTION: Some engines may be equipped with **OIL GARD®**. The **OIL GARD®** is intended to warn the operator that the engine is low on oil. Always check oil level before starting. Engine damage may occur if the oil level is not properly maintained and will void warranty coverage. If the engine will not start, has stopped running and/or a light flickers in the stop switch, add oil (see instructions).

Before starting *(see fig. 3)*

1. Move choke control ❶ to CHOKE position.
2. Move throttle control ❷ to FAST position.
3. Turn fuel shut-off valve ❸ ON, if equipped.
4. Move stop control ❹ to ON position, if equipped.

Note: OIL GARD® light in rocker stop switch ❹, if equipped, warns of low oil level. Light will flicker and engine will not start, or restart. Oil must be added. Fill to FULL mark on dipstick or overflowing at oil filler plug. Do not over-fill. OIL GARD®, however, will not stop a running engine if the engine runs low on oil.

Rewind starter *(see fig. 4)*

Grasp rope handle and pull slowly until resistance is felt. Then pull cord rapidly to overcome compression, prevent kickback and start engine. Repeat if necessary with choke in RUN position and throttle in FAST. When FAST. When engine starts, operate in FAST position.

Electric starter *(see fig. 4)*

On engines equipped with 12 volt starting systems, turn key to START position ❶. Repeat if necessary with throttle control in FAST position. When engine starts, operate in FAST position.

Note: If equipment manufacturer has supplied battery, charge it before trying to start engine, as equipment manufacturer recommends.

Note: Use short starting cycles (15 secs. per min.) to prolong starter life. Extended cranking can damage starter motor.

Stopping *(see fig. 5)*

Do not move choke control to CHOKE position to stop engine. Backfire or engine damage may occur. Move throttle control to IDLE or SLOW position ❶, if equipped. Then move stop control to OFF position ❷ or turn key to OFF ❸. Close fuel shut-off valve ❹.

Note: Always remove key from switch when equipment is not in use or left unattended.

Note: When engine is transported, close fuel shut-off valve to prevent leakage.

Adjustments

To prevent accidental starting, remove spark plug wire ❶ and ground it before adjusting, and disconnect battery at negative terminal, if equipped.

Throttle control adjustments *(see fig. 6)*

Remote control

Loosen casing clamp screw ❷. Move casing and wire ❸ in direction of arrow to end of travel. Move throttle control to FAST position ❹. Tighten casing clamp screw.

Carburetor adjustment

The manufacturer of the equipment on which this engine is installed specifies top speed at which the engine will be operated. DO NOT EXCEED this speed.

See an Authorized Briggs & Stratton Dealer for carburetor adjustment.

The carburetor on this engine is low emission. Air/fuel mixture is not adjustable. It may be equipped with governed idle. Governed idle and top speed have been set at the factory. If adjustment is required, see an Authorized Briggs & Stratton Service Dealer.

Note: Engines operated at about 3000 to 5000 feet (900 to 1500 meters) above sea level may require a high altitude carburetor main jet. If erratic performance is observed, contact a Briggs & Stratton Authorized Service Dealer for cost to install/purchase a high altitude carburetor main jet, if available.

Maintenance *(see figs. 7 8 9)*

See ***Maintenance Schedule***. Follow the hourly or calendar intervals, whichever occur first. More frequent service is required when operating in adverse conditions.

To prevent accidental starting, remove spark plug wire ❶ and ground it before servicing, and disconnect battery at negative terminal, if equipped.

Oil service ***(see fig. 7)***

Check oil level regularly.

Be sure correct oil level is maintained. Check every 8 hours or daily, before starting engine. See oil filling procedure under ***Oil Recommendations*** Do not over-fill.

Change oil.

Change oil after first 5 hours of operation. Change oil while engine is warm. Refill with new oil of recommended SAE viscosity grade. ***(see fig. 2)***

Gear reduction, if equipped

Remove oil fill plug ❷ and oil level plug ❸. Drain oil every 100 hours of operation or every season. To refill, pour SAE 30 oil into oil fill hole until it runs out level check hole. Replace both plugs. Oil fill plug has a vent hole ❹ and must be installed on top of gear case cover.

Air cleaner service ***(see fig. 8)***

Dual element air cleaners

Replace pre-cleaner ❷ and/or cartridge ❸ if very dirty or damaged.

To service pre-cleaner, if equipped, wash in liquid detergent and water. Squeeze dry in a clean cloth and allow to dry thoroughly. DO NOT oil pre-cleaner.

To service cartridge, clean by tapping gently on a flat surface. DO NOT oil cartridge.

Note: Do not use petroleum solvents, e.g., kerosene, which will cause the cartridge to deteriorate. Do not use pressurized air to clean cartridge. Pressurized air can damage the cartridge.

Rectangular dual element air cleaner

1. Loosen screw and tilt cover down. Remove pre-cleaner (if equipped) and cartridge assembly from cover.
2. After servicing pre-cleaner and cartridge, place pre-cleaner, if equipped (arrows up) over cartridge pleats (pre-cleaner lip will be at bottom of pleats).
3. Install pre-cleaner and cartridge assembly in cover.
4. Insert tabs on cover into slots ❺ in bottom of base.
5. Tilt cover up and tighten screw securely.

Oval dual element air cleaner

1. Remove knob and cover ❷. Lift air cleaner off stud.
2. After cleaning, reassemble pre-cleaner on cartridge. Push air cleaner firmly down on stud ❼ to seat in base.
3. Push cover squarely onto base. Tighten knob securely.

Maintenance Cont'd

Oil foam® air cleaner

To service foam element ❹, wash in liquid detergent and water. Squeeze dry in a clean cloth. Saturate in engine oil. Squeeze in clean, absorbent cloth to remove ALL EXCESS oil.

1. Loosen screw and tilt cover down. Remove bracket ❺ and foam element from cover.
2. Clean bracket, cover and base.
3. Install bracket and foam element in cover.
4. Insert tabs on cover into slots in bottom of base.
5. Tilt cover up and fasten securely with screw.

Spark plug service ***(see figs. 8)***

Clean/replace spark plug every 100 hours or every season, whichever occurs first. Spark plug wrench is available from any Authorized Briggs & Stratton Service Dealer.

Note: In some areas, local law requires using a resistor spark plug to suppress ignition signals. If this engine was originally equipped with resistor spark plug, use same type of spark plug for replacement.

Spark plug gap ❻ should be .76 mm or 0.030 in.

Keep engine clean ***(see figs. 9)***

Periodically remove chaff and debris build-up from engine. Do not spray engine with water to clean because water could contaminate fuel. Clean with a brush or compressed air.

Accumulation of debris around muffler ❷ could cause a fire. Inspect and clean before every use.

If muffler is equipped with spark arrester screen ❸, remove spark arrester screen for cleaning and inspection every 50 hours or every season. Replace if damaged.

To assure smooth operation, keep governor linkage, springs and controls ❷ free of debris.

Replace in-line fuel filter ❺. Drain fuel tank or close fuel shut-off valve before replacing fuel filter.

Clean cooling system. Chaff or debris may clog engine's air cooling system, especially after prolonged operation. Internal cooling fins and surfaces may require cleaning to prevent overheating and engine damage. Remove blower housing and clean as shown ❶.

Check valve clearance:

Model 110000 and 120000	intake .10-.15 mm.
Model 110000 and 120000	exhaust .23-.28 mm.
Model 200000 and 210000	intake .10-.15 mm.
Model 200000 and 210000	exhaust .10-.15 mm.

Maintenance Schedule

Follow the hourly or calendar intervals, whichever occur first. More frequent service is required when operating in adverse conditions noted below.

First 5 Hours

- Change oil

Every 8 hours or daily

- Check oil level
- Clean around muffler

Every 25 hours or every season

- Change oil if operating under heavy load or high ambient temperature
- Service air cleaner pre-cleaner*

Every 50 hours or every season

- Change oil
- Clean and inspect spark arrester, if equipped.

Every 100 hours or every season

- Service oil foam® air cleaner or cartridge*
- Clean/replace spark plug
- Change gear reduction oil, if equipped
- Clean cooling system*

Every season

- Check valve clearance

* *Clean more often under dusty conditions, or when airborne debris or chaff is present.*

Partial List of Genuine Briggs & Stratton Parts

Part	Briggs & Stratton (or equivalent) Part No.
Oil (20 oz.)	100005
Oil (48 oz.)	100028
Oil pump kit (uses standard electric drill to remove oil from engine quickly)	5056
Fuel stabilizer (1 oz., 30 ml single use pouch)	992030
Fuel stabilizer (4.2 oz., 125 ml bottle)	999005E (5041)
Fuel filter	694485
Flat air cleaner cartridge	491588 (5043)
Flat air cleaner pre-cleaner	493537
Oval air cleaner cartridge (Model 11, 12)	690610
Oval air cleaner pre-cleaner (Model 11, 12)	273356
Oval air cleaner cartridge (Model 20, 21)	692484
Oval air cleaner pre-cleaner (Model 20, 21)	273930
Resistor spark plug	802592E
Standard spark plug	492167E
Long life platinum spark plug (used on most OHV engines)	5066
Spark tester	19368
Spark plug wrench	19374

Storage

Engines stored over 30 days need to be protected or drained of fuel to prevent gum from forming in fuel system or on essential carburetor parts.

For engine protection, we recommend use of Briggs & Stratton Fuel Stabilizer available from an Authorized Briggs & Stratton Service Dealer. Mix stabilizer with fuel in fuel tank or storage container. Run engine for a short time to circulate stabilizer through carburetor. Engine and fuel can be stored up to 24 months.

Note: If stabilizer is not used or if engine is operating on gasoline containing alcohol, e.g. gasohol, remove all fuel from tank and run engine until it stops from lack of fuel.

1. Change oil. See **Oil service**. ***(see figs.*** 2 7***)***
2. Remove spark plug and pour about 15 ml (1/2 oz) of engine oil into cylinder. Replace spark plug and crank slowly to distribute oil.
3. Clean chaff and debris from cylinder and cylinder head fins, under finger guard and behind muffler.
4. Store in a clean and dry area, but NOT near a stove, furnace or water heater which uses a pilot light or any device that can create a spark.

Service

See an Authorized Briggs & Stratton Service Dealer. Each one carries a stock of Genuine Briggs & Stratton Parts and is equipped with special service tools. Trained mechanics assure expert repair service on all Briggs & Stratton engines. Only dealers advertising as "Authorized Briggs & Stratton" are required to meet Briggs & Stratton standards.

When you purchase equipment powered by a Briggs & Stratton engine, you are assured of highly skilled, reliable service at more than 30,000 Authorized Service Dealers worldwide, including more than 5,000 Master Service Technicians. Look for these signs wherever Briggs & Stratton service is offered.

You may locate your nearest Authorized Briggs & Stratton Service Dealer in our dealer locator map on our web site **www.briggsandstratton.com** or in the "Yellow Pages™" directory under "Engines, Gasoline" or "Gasoline Engines," or "Lawn Mowers" or similar category.

Note: Walking fingers logo and "Yellow Pages" are registered trademarks in various jurisdictions.

An illustrated shop manual includes "Theories of Operation," common specifications and detailed information covering adjustment, tune-up and repair of Briggs & Stratton OHV, single cylinder, 4 cycle engines. Order P/N 272147 from an Authorized Briggs & Stratton Service Dealer.

Insist on Genuine Briggs & Stratton replacement parts with our logo on the box and/or part. Non-original parts may not perform as well and may void your warranty.

BRIGGS & STRATTON ENGINE OWNER WARRANTY POLICY

Effective January 1, 2003 replaces all undated Warranties and all Warranties dated before January 1, 2003

LIMITED WARRANTY

Briggs & Stratton Corporation will repair or replace, free of charge, any part(s) of the engine that is defective in material or workmanship or both. Transportation charges on parts submitted for repair or replacement under this warranty must be borne by purchaser. This warranty is effective for the time periods and subject to the conditions stated below. For warranty service, find the nearest Authorized Service Dealer in our dealer locator map at www.briggsandstratton.com, or by calling 1-800-233-3723, or as listed in the 'Yellow Pages™'.

THERE IS NO OTHER EXPRESS WARRANTY. IMPLIED WARRANTIES, INCLUDING THOSE OF MERCHANTABILITY AND FITNESS FOR A PARTICULAR PURPOSE, ARE LIMITED TO ONE YEAR FROM PURCHASE, OR TO THE EXTENT PERMITTED BY LAW ANY AND ALL IMPLIED WARRANTIES ARE EXCLUDED. LIABILITY FOR INCIDENTAL OR CONSEQUENTIAL DAMAGES ARE EXCLUDED TO THE EXTENT EXCLUSION IS PERMITTED BY LAW. Some states or countries do not allow limitations on how long an implied warranty lasts, and some states or countries do not allow the exclusion or limitation of incidental or consequential damages, so the above limitation and exclusion may not apply to you. This warranty gives you specific legal rights and you may also have other rights which vary from state to state and country to country.

OUR PRODUCT

	VANGUARD™	ELS™ I/C® Industrial Plus™ Intek™ (Sleeve Bore)	Fource™ Intek™ (Kool Bore) Power Built™ OHV QUANTUM® Quattro™ Q45™ Sprint™	Classic™	Etek™

WARRANTY PERIOD*

	VANGUARD™	ELS™ I/C® Industrial Plus™ Intek™ (Sleeve Bore)	Fource™ Intek™ (Kool Bore) Power Built™ OHV QUANTUM® Quattro™ Q45™ Sprint™	Classic™	Etek™
Consumer Use	2 years	2 years	2 years	1 year	1 year
Commercial Use		1 year	90 days	90 days	

* **Note the following special warranty periods: 2 years** for Classic™ engines in the European Union and Eastern European countries, for all consumer products in the European Union, and for emission control systems on engines certified by EPA and CARB. **5 years** for consumer use, 90 days for commercial use of Touch-N-Mow® starter on Quantum® and Intek™ engines. **Engines used in competitive racing or on commercial or rental tracks are not warranted.**

The warranty period begins on the date of purchase by the first retail consumer or commercial end user, and continues for the period of time stated in the table above. "Consumer use" means personal residential household use by a retail consumer. "Commercial use" means all other uses, including use for commercial, income producing or rental purposes. Once an engine has experienced commercial use, it shall thereafter be considered as a commercial use engine for purposes of this warranty.

NO WARRANTY REGISTRATION IS NECESSARY TO OBTAIN WARRANTY ON BRIGGS & STRATTON PRODUCTS. SAVE YOUR PROOF OF PURCHASE RECEIPT. IF YOU DO NOT PROVIDE PROOF OF THE INITIAL PURCHASE DATE AT THE TIME WARRANTY SERVICE IS REQUESTED, THE MANUFACTURING DATE OF THE PRODUCT WILL BE USED TO DETERMINE THE WARRANTY PERIOD.

ABOUT YOUR ENGINE WARRANTY

Briggs & Stratton welcomes warranty repair and apologizes to you for being inconvenienced. Any Authorized Service Dealer may perform warranty repairs. Most warranty repairs are handled routinely, but sometimes requests for warranty service may not be appropriate. For example, warranty would not apply if engine damage occurred because of misuse, lack of routine maintenance, shipping, handling, warehousing or improper installation. Similarly, warranty is void if the serial number of the engine has been removed or the engine has been altered or modified.

If a customer differs with the decision of the Service Dealer, an investigation will be made to determine whether the warranty applies. Ask the Service Dealer to submit all supporting facts to his Distributor or the Factory for review. If the Distributor or the Factory decides that the claim is justified, the customer will be fully reimbursed for those items that are defective. To avoid misunderstanding which might occur between the customer and the Dealer, listed below are some of the causes of engine failure that the warranty does not cover.

Normal wear:

Engines, like all mechanical devices, need periodic parts service and replacement to perform well. Warranty will not cover repair when normal use has exhausted the life of a part or an engine.

Improper maintenance:

The life of an engine depends upon the conditions under which it operates, and the care it receives. Some applications, such as tillers, pumps and rotary mowers, are very often used in dusty or dirty conditions, which can cause what appears to be premature wear. Such wear, when caused by dirt, dust, spark plug cleaning grit, or other abrasive material that has entered the engine because of improper maintenance, is not covered by warranty.

This warranty covers engine related defective material and/or workmanship <u>only</u>, and not replacement or refund of the equipment to which the engine may be mounted. Nor does the warranty extend to repairs required because of:

1. PROBLEMS CAUSED BY PARTS THAT ARE NOT ORIGINAL BRIGGS & STRATTON PARTS.
2. Equipment controls or installations that prevent starting, cause unsatisfactory engine performance, or shorten engine life. (Contact equipment manufacturer.)
3. Leaking carburetors, clogged fuel pipes, sticking valves, or other damage, caused by using contaminated or stale fuel. (Use clean, fresh, lead-free gasoline and Briggs & Stratton Fuel Stabilizer, Part No. 5041.)
4. Parts which are scored or broken because an engine was operated with insufficient or contaminated lubricating oil, or an incorrect grade of lubricating oil (check oil level daily or after every 8 hours of operation. Refill when necessary and change at recommended intervals.) OIL GARD® may not shut down running engine. Engine damage may occur if oil level is not properly maintained. Read Operating & Maintenance Instructions.
5. Repair or adjustment of associated parts or assemblies such as clutches, transmissions, remote controls, etc., which are not manufactured by Briggs & Stratton.
6. Damage or wear to parts caused by dirt, which entered the engine because of improper air cleaner maintenance, re-assembly, or use of a non-original air cleaner element or cartridge. (At recommended intervals, clean and re-oil the Oil-Foam® element or the foam pre-cleaner, and replace the cartridge.) Read Operating & Maintenance Instructions.
7. Parts damaged by over-speeding, or overheating caused by grass, debris, or dirt, which plugs or clogs the cooling fins, or flywheel area, or damage caused by operating the engine in a confined area without sufficient ventilation. (Clean fins on the cylinder, cylinder head and flywheel at recommended intervals.) Read Operating & Maintenance Instructions.
8. Engine or equipment parts broken by excessive vibration caused by a loose engine mounting, loose cutter blades, unbalanced blades or loose or unbalanced impellers, improper attachment of equipment to engine crankshaft, over-speeding or other abuse in operation.
9. A bent or broken crankshaft, caused by striking a solid object with the cutter blade of a rotary lawn mower, or excessive v-belt tightness.
10. Routine tune-up or adjustment of the engine.
11. Engine or engine component failure, i.e., combustion chamber, valves, valve seats, valve guides, or burned starter motor windings, caused by the use of alternate fuels such as, liquified petroleum, natural gas, altered gasolines, etc.

Warranty is available only through service dealers which have been authorized by Briggs & Stratton Corporation. your nearest Authorized Service Dealer is listed in the "Yellow Pages™" of your telephone directory under "Engines, Gasoline" or "Gasoline Engines," "Lawn Mowers," or similar category.

Briggs & Stratton Engines Are Made Under One Or More Of The Following Patents: Design D-247,177 (Other Patents Pending)

6,325,036	6,077,063	5,819,513	5,606,948	5,497,679	5,235,943	5,138,996	4,996,956	4,633,556	4,430,984	DES. 308,871
6,284,123	6,064,027	5,813,384	5,606,851	5,320,795	5,197,425	5,086,890	4,977,879	4,630,498		DES. 308,872
6,260,529	6,014,808	5,765,713	5,548,955	5,271,363	5,197,422	5,070,829	4,971,219	4,522,080		DES. 309,457
6,230,678	5,894,715	5,645,025	5,546,901	5,269,713	5,191,864	5,058,544	4,895,119	4,520,288		DES. 356,951
6,202,616	5,852,951	5,642,701	5,503,125	5,205,700	5,188,069	5,040,644	4,819,593	4,512,499		DES. 361,771
6,116,212	5,823,153	5,619,845	5,501,203	5,243,878	5,186,142	5,009,208	4,719,682	4,453,507		DES. 375,963

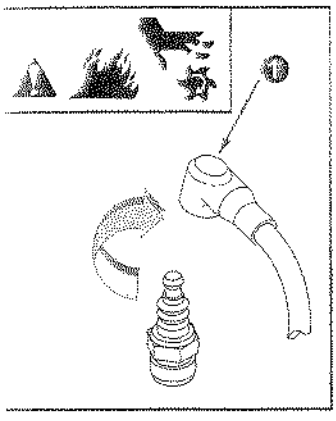

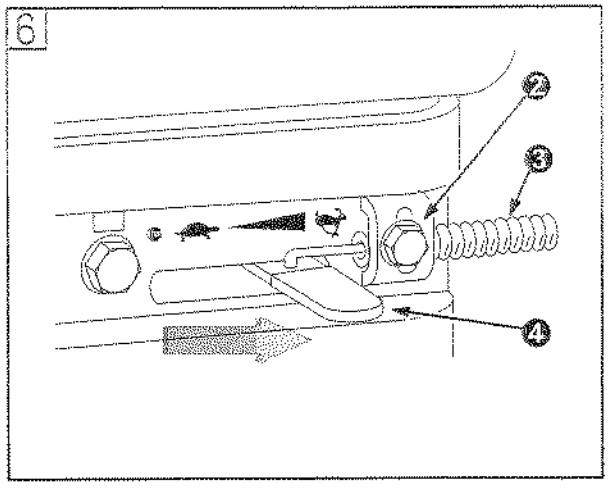
6

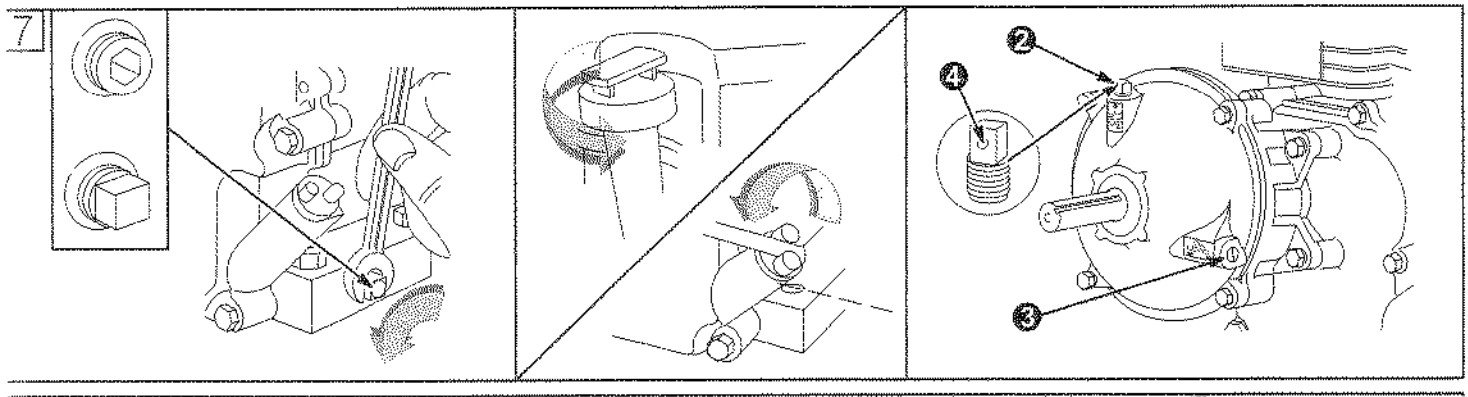
7

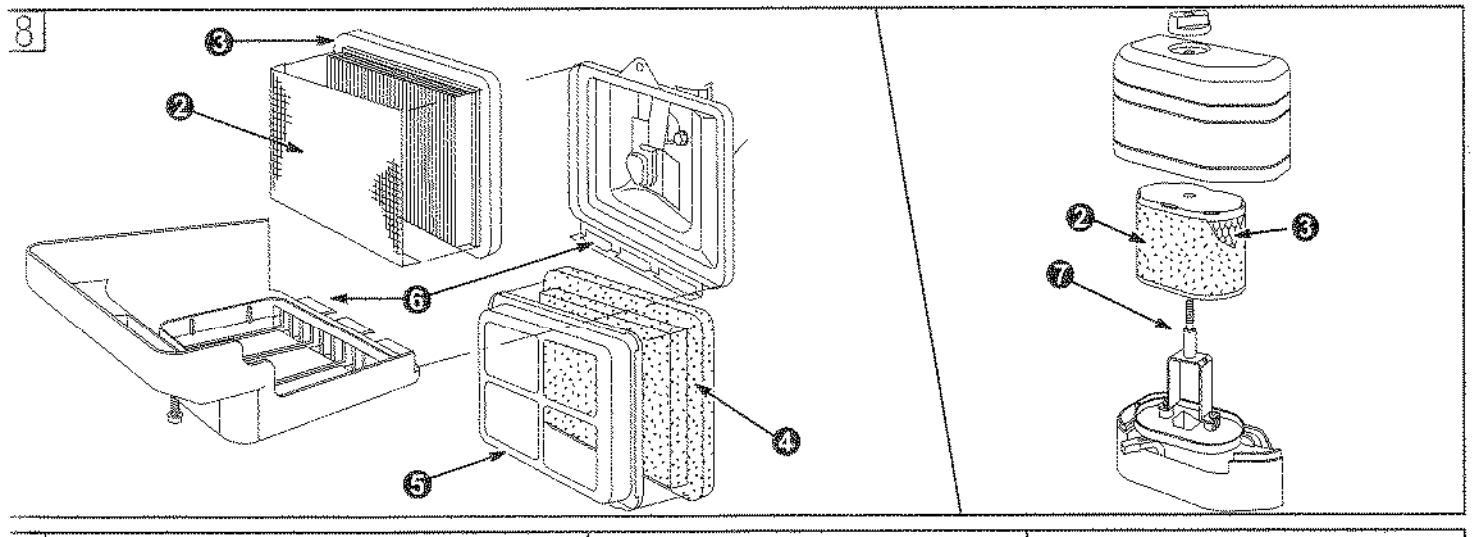
8

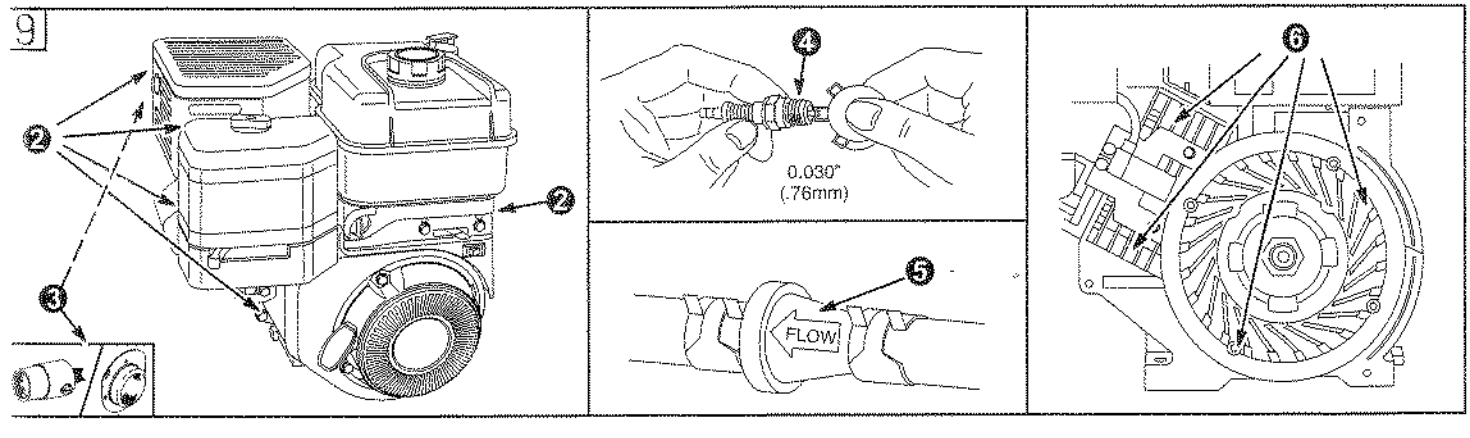
9
0.030"
(.76mm)
FLOW

(This page applicable in the U.S.A. and Canada only.)

Briggs & Stratton Corporation (B&S), the California Air Resources Board (CARB) and the United States Environmental Protection Agency (U.S. EPA)

Emission Control System Warranty Statement (Owner's Defect Warranty Rights and Obligations)

EMISSION CONTROL WARRANTY COVERAGE IS APPLICABLE TO CERTIFIED ENGINES PURCHASED IN CALIFORNIA IN 1995 AND THEREAFTER, WHICH ARE USED IN CALIFORNIA, AND TO CERTIFIED MODEL YEAR 1997 AND LATER ENGINES WHICH ARE PURCHASED AND USED ELSEWHERE IN THE UNITED STATES (AND AFTER JANUARY 1, 2001 IN CANADA).

California, United States and Canada Emission Control Defects Warranty Statement

The California Air Resources Board (CARB), U.S. EPA and B&S are pleased to explain the Emission Control System Warranty on your model year 2000 and later small off-road engine (SORE). In California, new small off-road engines must be designed, built and equipped to meet the State's stringent anti-smog standards. Elsewhere in the United States, new non-road, spark-ignition engines certified for model year 1997 and later, must meet similar standards set forth by the U.S. EPA. B&S must warrant the emission control system on your engine for the periods of time listed below, provided there has been no abuse, neglect or improper maintenance of your small off-road engine.

Your emission control system includes parts such as the carburetor, air cleaner, ignition system, muffler and catalytic converter. Also included may be connectors and other emission related assemblies.

Where a warrantable condition exists, B&S will repair your small off-road engine at no cost to you including diagnosis, parts and labor.

Briggs & Stratton Emission Control Defects Warranty Coverage

Small off-road engines are warranted relative to emission control parts defects for a period of two years, subject to provisions set forth below. If any covered part on your engine is defective, the part will be repaired or replaced by B&S.

Owner's Warranty Responsibilities

As the small off-road engine owner, you are responsible for the performance of the required maintenance listed in your Operating and Maintenance Instructions. B&S recommends that you retain all your receipts covering maintenance on your small off-road engine, but B&S cannot deny warranty solely for the lack of receipts or for your failure to ensure the performance of all scheduled maintenance.

As the small off-road engine owner, you should however be aware that B&S may deny you warranty coverage if your small off-road engine or a part has failed due to abuse, neglect, improper maintenance or unapproved modifications.

You are responsible for presenting your small off-road engine to an Authorized B&S Service Dealer as soon as a problem exists. The undisputed warranty repairs should be completed in a reasonable amount of time, not to exceed 30 days.

If you have any questions regarding your warranty rights and responsibilities, you should contact a B&S Service Representative at 1-414-259-5262.

The emission warranty is a defects warranty. Defects are judged on normal engine performance. The warranty is not related to an in-use emission test.

Briggs & Stratton Emission Control Defects Warranty Provisions

The following are specific provisions relative to your Emission Control Defects Warranty Coverage. It is in addition to the B&S engine warranty for non-regulated engines found in the Operating and Maintenance Instructions.

1. Warranted Parts

   Coverage under this warranty extends only to the parts listed below (the emission control systems parts) to the extent these parts were present on the engine purchased.

   a. Fuel Metering System
      - Cold start enrichment system (soft choke)
      - Carburetor and internal parts
      - Fuel Pump

   b. Air Induction System
      - Air cleaner
      - Intake manifold

   c. Ignition System
      - Spark plug(s)
      - Magneto ignition system

   d. Catalyst System
      - Catalytic converter
      - Exhaust manifold
      - Air injection system or pulse valve

   e. Miscellaneous Items Used in Above Systems
      - Vacuum, temperature, position, time sensitive valves and switches
      - Connectors and assemblies

2. Length of Coverage

   B&S warrants to the initial owner and each subsequent purchaser that the Warranted Parts shall be free from defects in materials and workmanship which caused the failure of the Warranted Parts for a period of two years from the date the engine is delivered to a retail purchaser.

3. No Charge

   Repair or replacement of any Warranted Part will be performed at no charge to the owner, including diagnostic labor which leads to the determination that a Warranted Part is defective, if the diagnostic work is performed at an Authorized B&S Service Dealer. For emissions warranty service contact your nearest Authorized B&S Service Dealer as listed in the "Yellow Pages" under "Engines, Gasoline," "Gasoline Engines," "Lawn Mowers," or similar category.

4. Claims and Coverage Exclusions

   Warranty claims shall be filed in accordance with the provisions of the B&S Engine Warranty Policy. Warranty coverage shall be excluded for failures of Warranted Parts which are not original B&S parts or because of abuse, neglect or improper maintenance as set forth in the B&S Engine Warranty Policy. B&S is not liable to cover failures of Warranted Parts caused by the use of add-on, non-original, or modified parts.

5. Maintenance

   Any Warranted Part which is not scheduled for replacement as required maintenance or which is scheduled only for regular inspection to the effect of "repair or replace as necessary" shall be warranted as to defects for the warranty period. Any Warranted Part which is scheduled for replacement as required maintenance shall be warranted as to defects only for the period of time up to the first scheduled replacement for that part. Any replacement part that is equivalent in performance and durability may be used in the performance of any maintenance or repairs. The owner is responsible for the performance of all required maintenance, as defined in the B&S Operating and Maintenance Instructions.

6. Consequential Coverage

   Coverage hereunder shall extend to the failure of any engine components caused by the failure of any Warranted Part still under warranty.

Look For Relevant Emission Durability Period and Air Index Information On Your Engine Emission Label

Engines that are certified to meet the California Air Resources Board (CARB) Tier 2 Emission Standards must display information regarding the Emissions Durability Period and the Air Index. Briggs & Stratton makes this information available to the consumer on our emission labels. The engine label will indicate certification information.

The **Emission Durability Period** describes the number of hours of actual running time for which the engine is certified to be emission compliant, assuming proper maintenance in accordance with the Operating & Maintenance Instructions. The following categories are used:

Moderate: Engine is certified to be emission compliant for 125 hours of actual engine running time.

Intermediate: Engine is certified to be emission compliant for 250 hours of actual engine running time.

Extended: Engine is certified to be emission compliant for 500 hours of actual engine running time.

For example, a typical walk-behind lawn mower is used 20 to 25 hours per year. Therefore, the **Emission Durability Period** of an engine with an **intermediate** rating would equate to 10 to 12 years.

The **Air Index** is a calculated number describing the relative level of emission for a specific engine family. The lower the **Air Index**, the cleaner the engine. This information is displayed in graphical form on the emission label.

After July 1, 2000, Look For Emissions Compliance Period On Engine Emissions Compliance Label

After July 1, 2000 certain Briggs & Stratton engines will be certified to meet the United States Environmental Protection Agency (USEPA) Phase 2 emission standards. For Phase 2 certified engines, the Emissions Compliance Period referred to on the Emissions Compliance label indicates the number of operating hours for which the engine has been shown to meet Federal emission requirements. For engines less than 225 cc displacement, Category C = 125 hours, B = 250 hours and A = 500 hours. For engines of 225 cc or more, Category C = 250 hours, B = 500 hours and A = 1000 hours.

The displacement of Model Series 110000 engine is 190 cc, Model Series 120000 engine is 206 cc, Model Series 200000 engine is 305 cc, Model Series 210000 engine is 342 cc.
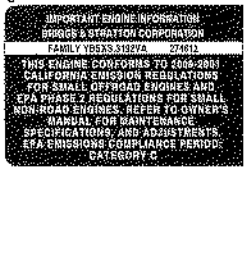
This is a generic representation of the emission label typically found on a certified engine.